HG
Vacuum Circuit Breakers

VCB

HG Series

Vacuum Circuit Breakers

New system solution with better selection and user convenience!

Standards and Certification

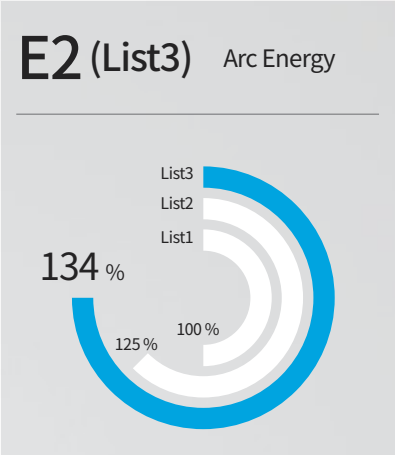

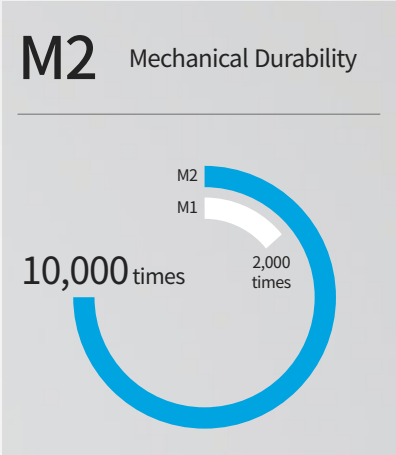

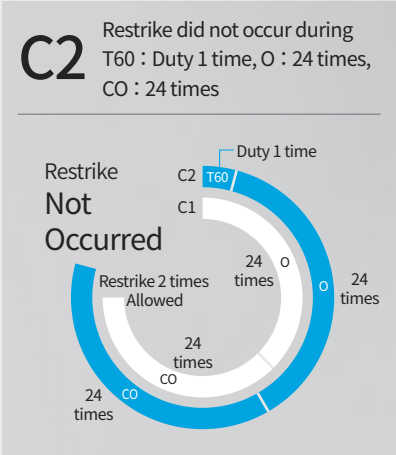

Draw-Out Type Breaker & ES/FS-Type Cradle

FS is an ES cradle with a safty shutter.

Draw-Out Type Breaker & GS-Type Cradle

GS-type is a high-end cradle for MCSG, to which mold bushing and metal shutter are applied.
GE is equipped with earthing switch.

Draw-Out Type Breaker & MS-Type Cradle

MS-type is a cell-type cradle and complete implementation of circuit breaker board of panel.
It includes every application of GS-type and can be equipped with various options based on door requirements.

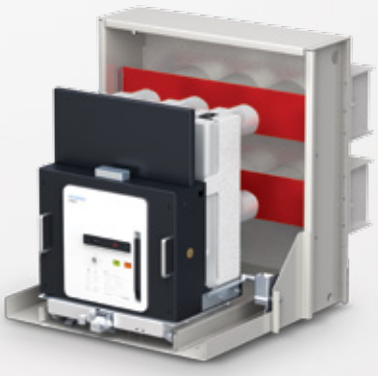

Draw-Out Type Breaker & ES/FS-Type Cradle

Draw-Out Type Breaker & Gs-Type Cradle

Draw-Out Type Breaker & MS-Type Cradle

Overview and Characteristics (HGV)

Features

- Hyundai Electric vacuum circuit breaker is composed of vacuum interrupter which is manufactured independently based on our 30 years of manufacturing experience ensuring the lowest leak rate and high reliability for long-lasting lifetime.
- HG-Series vacuum circuit breaker is for installation under high pressure and very high pressure switchboard (7.2 ~ 25.8 kV) as a circuit breaker for entrance or branching. It is used for control, line protection, transformer protection and motor protection. In addition, it has a fully open architecture unlike existing closed or half-closed ones, and is free of the insulating method relying on closed or half-closed-type insulating material but employed an ideal insulation method based on insulation by air/surface distance expansion to endure withstanding voltage which is 1.3 times greater than rated voltage even in the event of destruction of auxiliary insulating material.
  In particular, with its optimized flow path of the conductive part which naturally suppresses temperature rise, it enables stable operation of the system.

Vacuum Circuit Breaker (VCB)

Vacuum Interrupters (VI)

Standards and Certification

HG-Series vacuum circuit breakers were tested and certified by a recognized testing agency which is a member of STL in accordance with IEC 62271-100 (2012) and can be installed and applied to the environment and conditions allowed by the standard.

Applied Standards

IEC 62271-1 (2008)
High-Voltage Switchgear and Controlgear
- Part 1 : Common Specifications

IEC 62271-100 (2012)
High-Voltage Switchgear and Controlgear
- Part 2 : Alternating-Current Circuit Breaker

Certification

ACCREDIA
Product certification issued by the Italian accreditation body for base models and derived models

STL
Test certificate issued only if tested and evaluated based on STL Guide by STL member test agency

Electrical Endurance Rating : E2 (List3)

E2 grade is the highest among electrical endurance grades specified in IEC 62271-100. There are three test operation obligations of List1, List2 and List3, out of which one has to be picked.
For specifications, List 1 is recommended ; however, List3 which emerged for the first time in the 2008 revision has lower cases of breaking of T10 and T30 when compared with Lists 1 and 2. However, greatly increased breaking testing times of T60 resulted in the same test equality but the arc energy on the breaker is like follows : when list 1 is 100 %, list 2 is 125 % and list 3 134 %, making the test environment harsh.
To HG-Series VCB, E2 grade List3 is applied.

E2 (List3) | Arc Energy

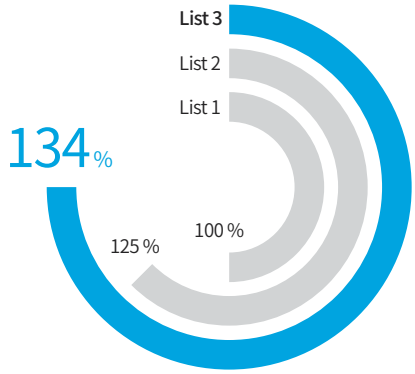

Mechanical Endurance Rating : M2

The IEC standard specifies mechanical endurance ratings so that customers can select and use product performance and quality levels. Out of the M1 and M2 mechanical endurance, the M2 level is applied to HG-Series vacuum circuit breaker.

M1
- Pre-test (Characteristic, Insulation and Resistance)
- Confirmation test after 2,000 times are completed (Characteristic, Insulation and Resistance)

M2
- Pre-test (Characteristic, Insulation and Resistance)
- Confirmation test after every 2,000 times of test are completed (Characteristic, Insulation and Resistance)
- Confirmation test after 10,000 times are completed (Characteristic, Insulation and Resistance)

M2 | Mechanical Durability

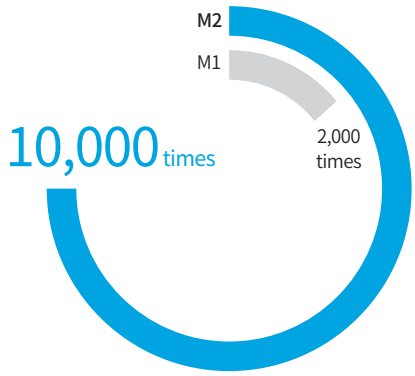

Make and Break Rating of Cable Charging Current : C2

The over-voltage higher than usual is applied to contacts when charging current is interrupted, which increases the chance of restrike. In the event of restrike, there is a possibility of breaking insulation due to high surge voltages.
Therefore, cable charging current make and break tests are divided into C1 and C2 in order to separate stability level. Also, C2 level has been applied to HG-Series vacuum circuit breaker.

C1
Restrike were allowed two times among “O” 24 times, “CO” 24 times

C2
Restrike did not occur among “T60” Duty 1 time, “O” 24 times, “CO” 24 times

C2 | T60 : Duty 1 time, O : 24 times, CO : Restrike did not occur during 24 times

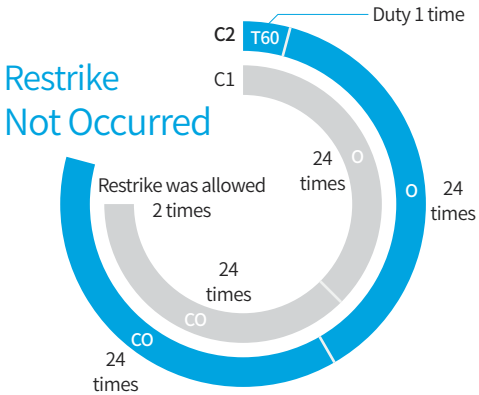

Overview and Characteristics (HGV)

Convenience of Panel Configuration

It offers the convenience of panel production ensuring stability and prevention of spreading accidents by isolated metal structure and breaker boundary compartment of M-type cradle

- Completely isolated structure by metal : Prevention of spreading accidents and securing stability
- Improved ease of operation by access truck
  - Panel doors (door) is implemented to allow pushing/drawing only when panel doors are closed
  - Location indicator during pushing/drawing
- Equipped with safety devices and accessory devices
  - Control power connecting interlock
  - Grounding switch and interlock
- Panel manufacturing convenience : Units were assembled based on breaker boundary compartment

VCB in the Cradle

Cradle Empty

MS Type Cradle

Cradle Front

Cradle Back

Overview and Characteristics (HVF)

Features

- With the technology and know-how which manufactured the largest number of VCB models and based on the newer and more stabilized machine unit and breaker units, high reliability and quality tested by new standard of IEC 62271-100
- By adopting electro motion spring mechanism with faster and more reliable mechanical features, 3 cycles of breaker time is implemented for all models
- Implementation of full moldization which inserts breaker unit to insulating material container to minimize the human and material damage in the event of an accident
- Reduced the size of vacuum interrupters using the optimal arc control technology to ensure higher rated breaking current

Structure and Operation

HVF-type VCB is of the structure in which electric motion spring-type operation and control machine unit is installed inside operation control box and vacuum interrupting unit. Also electric current unit are installed inside insulation frame which is on the rear side of operation control box.
Insulation Frame of epoxy material is designed to be a closed-type in order to have sufficient mechanical strength and dielectric strength and to minimize the impact of dust and dirt during use.

In addition, it helps solidly fixing vacuum circuit breaker unit, upper and the lower terminal unit and flexible terminal installed inside insulation frame to well withstand various electrical and mechanical shock and to adapt to temperature rise during the conducting of rated current.
Contacts of VI unit were designed to be a special shape using special materials sintered with Cu and Cr in an appropriate ratio, thus they have a superior performance in the short-circuit current and various load current cut-off, and are completely sealed in a vacuum state to be safely used for a long time.

HVF Type VCB Front

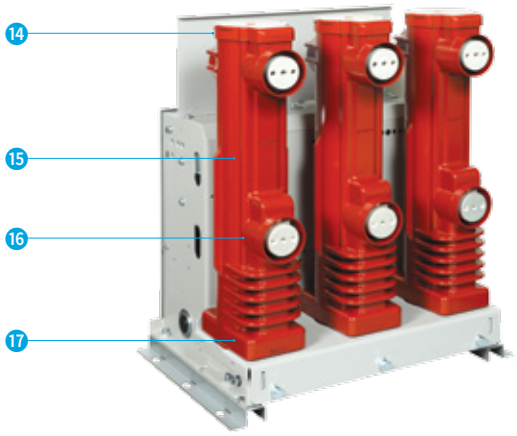

HVF Type VCB Rear

HVF Type VCB

1. Control Circuit Connecting Unit
2. Manual Charging Hole
3. Closing Spring Condition Indicator
4. Breaker Operating State Indicator
5. Counter
6. Draw-Out Mechanism Unit
7. Shutter
8. Electric Current Unit
9. Cradle (G Grade)
10. Manual Feed Button
11. Housing Box
12. Manual Trip Button
13. Nameplate
14. Upper Insulating Cap
15. Vaccum Interrupter
16. Lower Terminal
17. Insulating Frame

Overview and Characteristics (HVG)

Features

- HVG-Type VCB has a compact size minimizing installation footprint
- Simple structure and ease operation. Test completed by the new standard of IEC 62271-100 with 3-cycle breaker
- Easy inspection and maintenance for current conducting. Mechanism unit can be easily maintained by opening the front cover

Structure and Operation

Electric motion spring system was adopted for operation of breaker, with main components of motor, closing spring, trip spring, contact pressure spring, closing solenoid, solenoid trip, auxiliary switch, reclosing-preventing contactor, vacuum breaker unit and the like.
Operation control machine unit consists of the mechanism of electric motion spring operating method and should make breaker maintain stable switching features during long hours of usage.
Current breaker and conducting units consist of vacuum circuit breaker unit and upper and the lower insulation units installed within insulation frame. In addition, breaker and conducting units are securely fixed to withstand various electrical and mechanical shock within insulation frame. Insulation frame of unsaturated polyester material (BMC) has a sufficient insulating dialectric strength.
When the control circuit of the circuit breaker are connected and voltage is applied to the control circuit, the closing spring is tensioned making the breaker always ready for closing. Once the breaker closes, the closing spring immediately gets recharged and the contacting spring is to provide appropriate pressure to the vacuum circuit breaker unit. At this time, the trip spring has been accumulating energy for the trip. Closing and trip solenoid control in operation control machine unit is commanded to perform electrical open/close in order to operate operation control machine unit ; breaker can be manually operated by manual operation handle, manual ON button and manual trip button.

HVG Type VCB Front

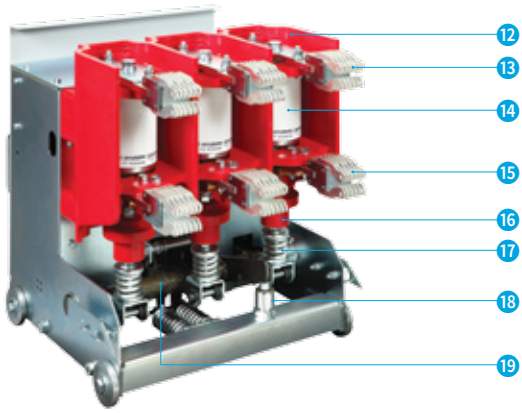

HVG Type VCB Rear

HVG Type VCB

1. Manual Charging Hole
2. Closing Spring Condition Indicator
3. Breaker Operating State Indicator
4. Counter
5. Interlock Lever
6. Conducting Unit
7. Control Circuit Connecting Unit
8. Housing Box
9. Manual Closing Button
10. Manual Closing Button
11. Draw-Out Mechanism Unit
12. Insulating Frame
13. Upper Terminal
14. Vacuum Interrupter
15. Lower Terminal
16. Insulation Rod
17. Contact Pressure Spring
18. Buffer
19. Circuit Breaker 3-Phase Central Axis

Overview and Characteristics (HVF/HVG)

Application of VCB

Applied Standards

Designed and tested in compliance with all the requirements of the International Standard IEC 62271-100 and can be applied to ANSI C37 standard based on breaker rating.

High-Speed Load Switchover and Operation Responsibilities

As closing and opening time of the circuit breaker is short, thus it is suitable for high-speed load transfer which requires input power switchover without stopping operation of load and can be used as a circuit breaker for high reclosing applied to avoid transient deviation such as lightning, temporary earth fault, etc. Operating responsibilities of the breaker are classified and verified as follows in accordance with related standards such as IEC 62271-100, making it available for various-type of operating conditions :

- O-0.3 sec-CO-3 min-CO (For High Speed Reclosing)
- CO-15 sec-CO (Standard)

(O : Opening, C : Closing, CO : Closing soon after opening)

Capacity of Conducting Current

Can be operated at - 5 °C ~ + 40 °C. Rating current of circuit breaker is determined at an ambient temperature of + 40 °C based on IEC standard. When the breaker is used at a different temperature it should be calibrated for the load current.
The figure below displays load current at various temperatures. However, this figure should only apply to open switchgear and load current is reduced when applied to closed switchboard.

Vacuum Circuit Breaker Load Characteristic Curve

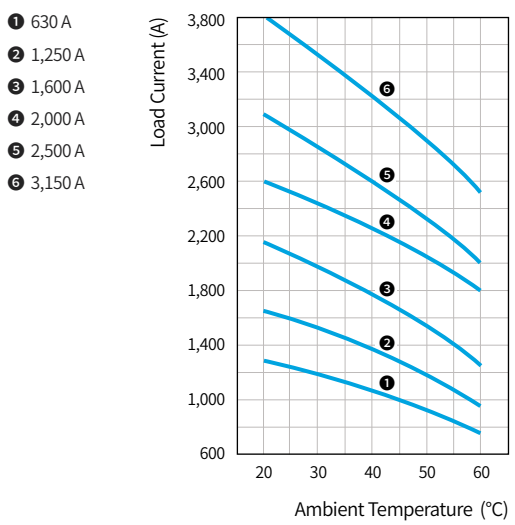

Machining Line and Cable Opening/Closing

Cutting off cable current and machining line during no load poses no over-loading and restriking risks due to line charging current.

Cutting off Short-Circuit Current with High Recovery Voltage Rising Rate

In case of short-circuit current occurs at the back end of current limiting chalk, transformer or generator, recovery voltage rising rate exceeds the value regulated by IEC 62271-100, and can have a value higher than 10 kV/μs, but Hyundai Electric vacuum circuit breaker can be in such adverse conditions.

Opening and Closing Electrically

Frequent opening/closing and relatively less opening/closing surge makes it suitable for electric usage. However, for safer usage, special consideration is necessary for the maintenance and opening/closing surge of the breaker, thus make sure to contact us for application.

No-Load Transformer Opening/Closing

Chopping current ranges 4 ~ 5 A when cutting off inductive low current using contacts of special materials and no hazardous overvoltage when cutting off no-load transformer current.
Some dry-type transformer models may have lower dialectric strength compared to general transforms. Thus make sure to check dialectric strength of transformer to use and protect it using surge absorber when needed.

Capacitive Load Opening/Closing

Designed to be suitable for use for capacitive circuit no hazardous over-voltage and restriking at the time of capacitive load opening/closing such as condenser bank, etc. It can be used to capacitive load currents of up to 400 A (Except for VCB below 7.2 kV 20 kA) and for further details, make sure to contact us.

Motor Opening/Closing

Frequent electrical opening/closing and relatively less opening/closing surge in rate current makes it especially advantageous for opening/closing of high capacity motors with frequent opening/closing. For low-dose motor with low dialectric strength of 600 A or less starting current, installation of appropriate surge absorber is recommended to more reliably protect the system and load facilities.

Overview and Characteristics (HVF/HVG)

Operation and Control Voltage

Electric Motion Spring Charging Method

Motor is used for charging the closing spring in the vacuum circuit breaker of the electric motion spring system. For current consumption during motor operation, refer to <Table 1>.
<Table 1> shows the maximum current consumption of the motor, the starting current which is generated during the initial operation can be ignored as they lasts very short amount of time.

Rated Specifications of Auxiliary Contacts

- Opening/Closing Capacity : 200 W (Inductive Load at 220 V DC), 200 W (Resistive Load in DC)
- Closing Current : 30 A
- Continuous Current : 10 A
- Opening/Closing Current : 2 A (DC 220 V at T = 20 ms)
- Operating Voltage : 250 V AC/DC

Solenoid

Solenoids detect electrical control signal and enable operating mechanism inside the breaker to operate according to a control signal.
For current consumption of closing and trip-controlling solenoid, refer to <Table 1> whose values are based on the peak current.

Auxiliary contacts and wiring

Wiring of control jack for operation and control can be configured with 'fixed jack' method whose jack is installed and fixed on the breaker body and 'draw-out jack' method whose jack is installed on the end of lead cable connected to the body.
Specifications and wiring of auxiliary contacts are as follows :

HVG Type

- 4NO + 4NC & Fixed Jack (Standard) - A-Type
- 7NO + 7NC & Fixed Jack - B-Type
- 10NO + 10NC & Fixed Jack - D-Type

HVF Type

- 4NO + 4NC & Fixed Jack : Fixed Standard (2.2 m) - A-Type
- 4NO + 4NC & Draw-Outs Jack (Lead Cable : 0.8 m) : Draw-Out-Type Standard - C-Type
- 7NO + 7NC & Fixed Jack (2.2 m) - B-Type
- 10NO + 10NC & Draw-Outs Jack (Lead Cable : 0.8 m) - D-Type

Photo when Fixed Jack was Applied

Photo when Draw-Out Jack was Applied

<Table 1> Fluctuation of Operation and Control Voltage & Current Consumption

Rated Voltage	Current Consumption (A)						Voltage Range (Based on IEC)
	Motor/Condenser		Closing		Trip (Open)		
	HVG Type	HVF Type	HVG Type	HVF Type	HVG Type	HVF Type	
48 V DC	4.8	20	10.3	2.7	10.3	6.2	Motor : 85 ~ 110 % Closing Control : 85 ~ 110 % Trip Control : 70 ~ 110 % (85 ~ 110 % for AC Control Voltage) ※ Voltage range of ESB standard applied breaker complies with the ESB specification.
110 V DC	2.4	8	3.3	1.3	3.3	2.7	
125 V DC	2.8	8	3.5	1.5	3.5	2.4	
220 V DC	1.2	4	2.4	0.7	2.4	1.4	
110 V AC	3.6	10	3.3	1.3	3.3	2.7	
220 V AC	2.5	6	2.4	0.7	2.4	1.4	

Overview and Characteristics

Application of VCB Compartment

1. Group Monitoring System
   Measuring System
   Protection Relay System (HGMAP)
2. VCB Compartment
3. VCB
4. Voltage Transformer
5. Power Cable
6. Current Transformer
   Zero Current Transformer

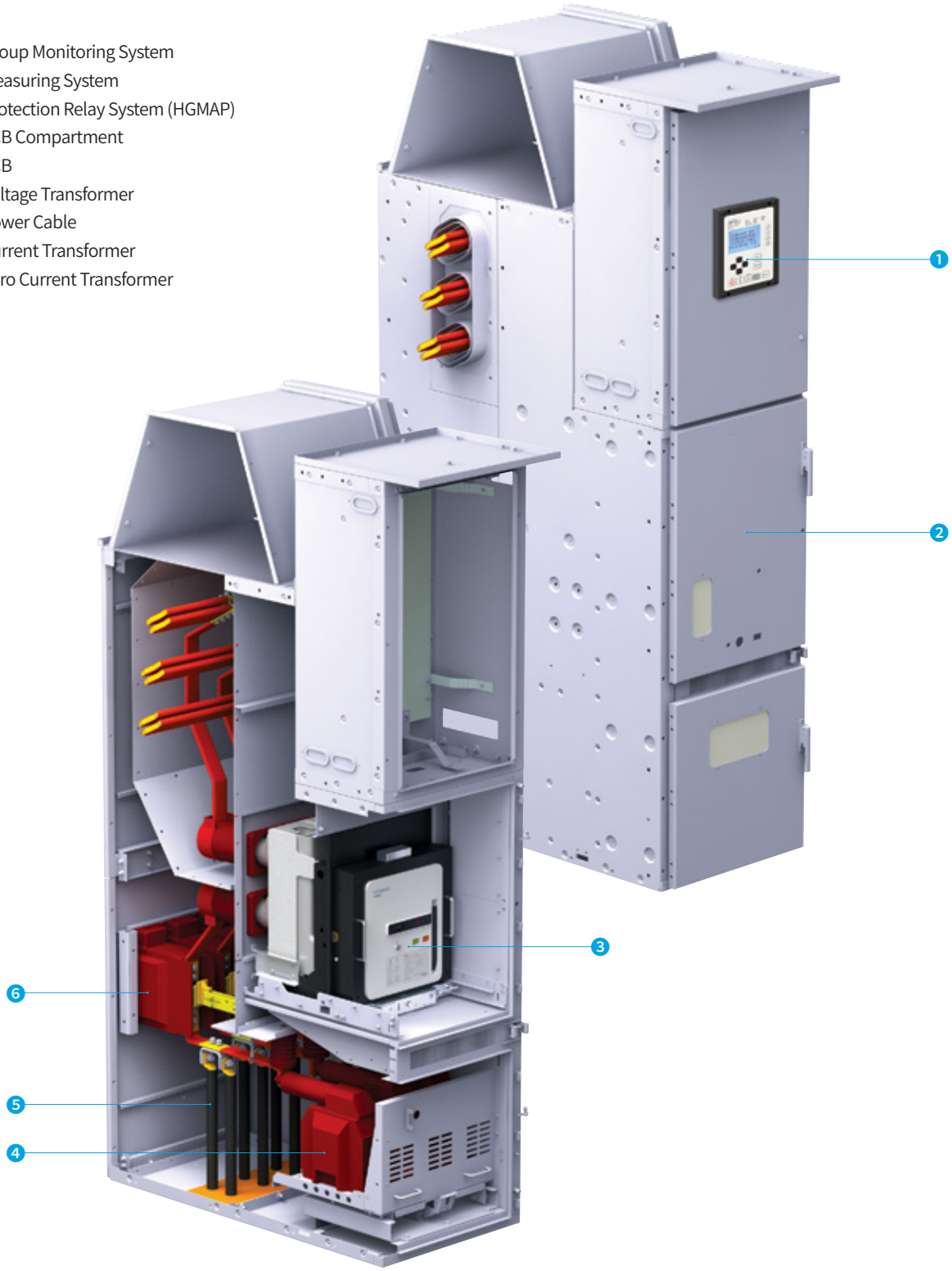

Overview and Characteristics (UVC)

Operation Overview

Operation Time and Current

Item		Closing Current (A)	Holding Current (A)	Trip Current (A)	Closing Time (ms)	Trip Time (ms)
Continuous-Type	AC/DC 100 ~ 125 V	3.0	0.5	-	Less than 110	Less than 40
	AC/DC 200 ~ 230 V					
Latch-Type	AC/DC 100 ~ 125 V	3.0	-	4.0	Less than 110	Less than 25
	AC/DC 200 ~ 230 V					

※ For latch-type, closing current flows only for 170 ms.

Operating Voltage

Item	Contents
Closing Voltage	85 ~ 110 % of Rated Voltage
Trip Voltage	70 ~ 110 % of Rated Voltage
Drop Out Voltage	AC/DC 25 V

Rating of Auxiliary Contacts

Item	Contents	
Voltage	AC 110 V	AC 220 V
Operating Current	5 A	2 A

Fuse Selection

Hyundai Electric does not produce fuse. Thus refer to fuse catalog to select and purchase one to attach it to our high-voltage vacuum contactor. Following diagram is fuse selecting methods for customers' convenience based on some fuse makers. Make sure to refer to fuse maker catalogs.

Fuse Attaching-Type

- Fuse only cuts off short-circuit current exceeding cut-off current of vacuum circuit breakers and uses protective relay for over-current.
- Fuse melting detector is an option and supplied at the request of user. However, for systems without protector against single-phase earth fault, single-phase short-circuit, use fuse melting detector to configure circuit to trip in the event of vacuum contactor incident.

Fuse Non-Attaching-Type

- For draw-out-type, the part to be connected with fuse is replaced with bus bar, thus it can change into fuse-attached draw-out-type.
- Fuse non-attached-type is limited in circuit breaking, thus breaker should be installed on the front end.

Rated Current Selection

Compare operating conditions and time-current characteristics of fuse to select rated current values meeting each item below by referring to fuse maker catalog.

- Rated current value shall be higher than full load current.
- Must be a fuse with sufficient rated current whose fuse element does not deteriorate due to allowed overload.
- Select fuse rated current value whose starting current (Magnetizing inrush current)-time characteristics fall within current-allowed time characteristics of fuse so that magnetizing inrush current or starting current may not deteriorate fuse elements.

Rated Breaking Current Selection

Figure out short-circuit current of the circuit and select fuse with higher rated breaking current.

Item		Contents			
Rated Insulation Voltage (kV)		3.6		7.2	
Rated Operating Voltage (kV)		3.3		6.6	
Rated Current (A)		200	400	200	400
Maximum Load Capacity	Motor (kW)	750	1500	1500	3000
	Transformer (kVA)	1,000	2,000	2,000	4,000
	Condenser (kVAR)	750	1,200	1,500	2,000

※ Select the rated current value for each rated voltage from the table above, depending on the secondary axle load and capacity.

Fuse Selection Table based on Load Conditions

This table is based on the condition when operation was carried out for less than 15 seconds and about 2 times per hour for 3-phase motor load of SIBA company product. For other loading conditions, refer to the fuse maker catalog.

Load		3Ø Motor (kW)				3Ø Transformer (kVA)				3Ø Condenser (kVAR)			
		3.3 kV		6.6 kV		3.3 kV		6.6 kV		3.3 kV		6.6 kV	
Fuse Maker		SIBA	LS	SIBA	LS	SIBA	LS	SIBA	LS	SIBA	LS	SIBA	LS
Fuse Rated Current (A)	6.3 (5)	-	-	-	-	-	-	-	15	-	-	-	-
	10	-	-	-	-	-	15	-	30	-	10	-	25
	16	-	-	-	-	-	-	-	-	-	-	-	-
	20	-	37 ~ 75	-	75 ~ 160	50	30	100	75	30	30	60	50
	25	-	-	-	-	-	-	-	-	-	-	-	-
	31.5 (30)	-	-	-	-	80	75	160	150	50	50	100	100
	40	-	-	-	-	100	100	200	200	75	75	150	150
	50	90	90 ~ 200	160	185 ~ 400	125	150	250	300	100	100	200	200
	63	100	-	200	-	160	-	315	-	125	-	250	-
	80 (75)	125	-	250	-	200	200	400	500	150	150	300	400
	100	160	220 ~ 400	330	450 ~ 800	250	375	500	750	200	300	400	600
	125	200	-	400	-	315	-	630	-	250	-	500	-
	160 (150)	275	450 ~ 630	550	900 ~ 1,250	400	500	800	1,000	300	400	650	800
	200	315	710 ~ 800	650	1,500	500	750	1,000	1,500	375	600	750	1,000
	250	400	-	830	-	630	-	1,250	-	500	-	1,000	-
	315 (300)	500	-	1,000	-	750	1000	1,500	2,000	600	-	1,200	-
	355	600	-	1,200	-	900	-	1,800	-	700	-	1,400	-
	2X125	-	-	-	-	-	-	-	-	-	-	-	-
	2X160	500	-	1,000	-	800	-	1,600	-	600	-	1,200	-
	2X200	650	-	1,300	-	1,000	-	2,000	-	750	-	1,500	-
	2X250	750	-	1,500	-	1,250	-	2,500	-	1,000	-	2,000	-

※ If you are using SIBA fuse under condenser load, it is recommended to select fuse rated voltage one level higher than current voltage under load.
E.g. : If you use the SIBA fuse under 3.3 kV 200 kW motor load, select 125 A.
E.g. : If you are using the SIBA fuse under 6.6 kV 200 kVAR condensor load, it becomes 6.6 kV 50 A but as it is condesor load, select 12 kV 50 A which is one rated voltage higher.

Precautions per Load

Motor

- For selection of fuse, make sure to refer to 'Fuse selection table based on load conditions' to avoid damaging fuse by allowed overload and motor starting voltage.
- When using a transformer for control power, controlled power should not drop by 20 % or more by motor starting voltage.

Transformer

- For selection of fuse, make sure to refer to 'Fuse selection table based on load conditions' to avoid damaging fuse by no-load inrush current.

Capacitor

- For selection of fuse, make sure to refer to 'Fuse selection table based on load conditions' to avoid damaging fuse by inrush current.
- If you are using capacitor load back-to-back, contact us as adverse effect is expected due to high inrush current.

Overview and Characteristics (UVC)

Anti Pumping Function

Anti pumping circuit which triggers closing and trip occur once only when the closing command and tripping command occur at the same time is embedded inside the controller.

Reducing Current Consumption

- By removing current in the PWM method, power consumption is reduced by 40 % in comparison with other products

Certification

- Products were developed in compliance with IEC, NEMA standards.
- Acquired the KAS (Korea Electrical Safety Corporation) certified V checkmark, thus KAS recognizes independent test reports, making other acceptance testing not necessary.
- Acquired UL and cUL certification according to UL347, proving reliability for use in the US and Canada.

Realizing Free Voltage of Operating Power

- Common operating voltage of AC/DC 100 ~ 125 V, AC/DC 200 ~ 230 V.
- Controller used in 2 one voltage ranges is compatible as they are identical parts.

Noise Removed

- By adopting the solenoid magnetizing method as standard using PWM control, noise is removed.

Overview and Characteristics (VI)

Vacuum interrupters is a product that places conducting contacts in a sealed vacuum container for stable cutting off and opening/closing in the high-voltage large current.

High Performance

- High insulation performance in vacuum - able to cut off large current even in short-distance
- Less arc and low contact consumption
- Optimized design - compact and lightweight

Minimized Maintenance

- Very low leak rate over long period of usage - high reliability
- Special material with very low gas content - long-lasting high-vacuum state

Eco-Friendly

- Sealed and welded under highly vacuum state not effecting or is affected by surrounding environment

Compliant with International Standards

- Manufactured in accordance with IEC standard - can be used by various products

Compact and Lightweight

Excellent Cutting-Off Performance

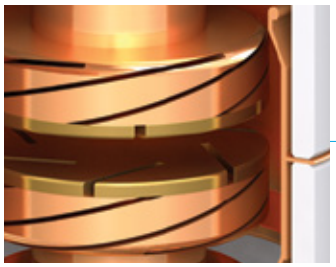

Overview and Characteristics (VI)

Technical Advantages of Vacuum Interrupters

High Cutting off Performance

Short circuit performance with a compact size through transverse and axial magnetic field contacts.

Low Current Chopping

In clearly low current, as shown in Fig.1, the metal vapor arc is interrupted before reaching to a current zero point. The current chopping which is generated at the point creates over-voltage and may affect surrounding equipment. Current chopping relies on vacuum interrupter and should be as low as possible. HG-Series vacuum interrupter uses CuCr contact materials to maintain the current chopping under 5 A.

<Fig.1> Over-Voltage by Current Chopping when Cutting off Induced Current

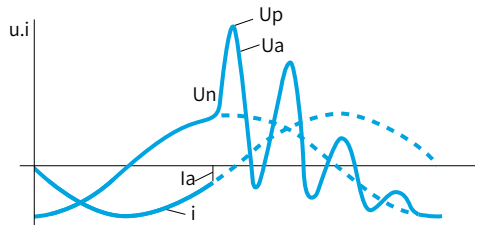

Un : Commercial Frequency Counter Ground Voltage
Ua : Load Breaker Terminal Voltage
Up : Maximum Over-Voltage at The Loading Unit
i : Commercial Frequency Current
Ia : Current Chopping

<Fig.2> Single-Phase Equivalent Circuit for Cutting off Induced Current

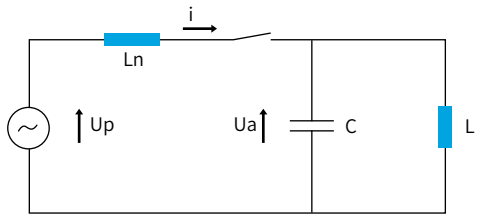

Un : Commercial Frequency Counter Ground Voltage
Ua : Load Breaker Terminal Voltage
i : Load Current
Ln : Inductance of Power System
L : Inductance of Load
C : Load Capacity

High Dialectric Strength

After opening, interrupted current is discharged and exists in a plasma state due to metal vapor between the contacts. Arc is extinguished at a current zero point, the metal vapor loses conductivity in microseconds. When interrupted, dialectric strength in vacuum is recovered in a short time. At a normal state, high vacuum is maintained under 1×10-7 mbar. At an opening state, distance between contacts are shorter but is with high dialectric strength.

Minimized Contact Consumption

With low arc voltage and short arcing time, contact consumption was minimized to enhance electrical life of vacuum interrupters.

<Fig.3> Vacuum Insulation Strength

Data
Contact Gap
: 0.8 mm
Contact Diameter
: 10 mm

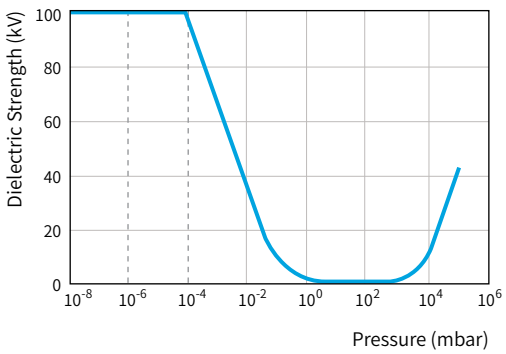

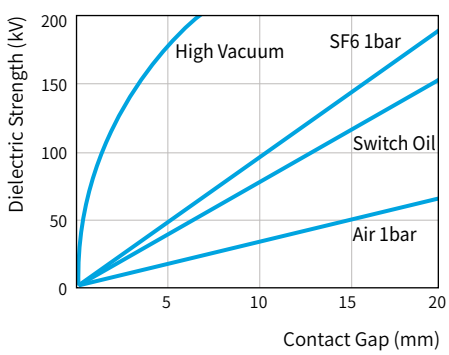

Interrupting Behavior

As for untreated flat contact, when the contact is opened, the hot arc is focused and fixed on the contact center, which is called Pinch Effect. To prevent this from happening, transverse or axial magnetic field methods are applied to rotate or spread the arc so that the focused arc is staying in the gaps.
This makes arc energy to be evenly distributed on the contact surface to minimize contact damage.

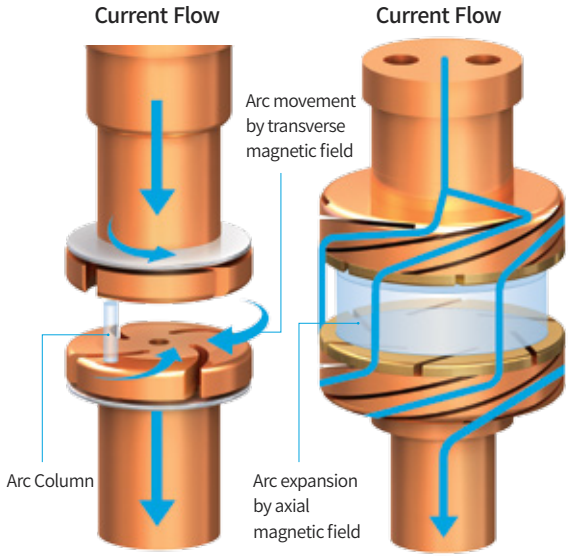

Current Interrupting Properties

When the contact is opened, arc is generated between the contacts, the arc is then maintained until it reaches the current zero point. At this time, arc melts the contacts generating metal vapor. If the arc is locally focused, a greater amount of metal vapor is generated overheating contacts and will eventually degrade the interrupting performance.
Therefore, in order to enhance the interrupting performance, it is important to prevent local overheating of the contacts. As an arc extinguishing chamber technology to prevent localized overheating of these contact, we applied the transverse and axial magnetic field approaches.

Transverse magnetic field approach generates a magnetic force in the horizontal direction between the contact point rotating arc to prevent local overheating of the contacts, axial magnetic field method is a technique for preventing local overheating through the spread of the arc to generate a magnetic force in the axial direction.
Using the contact to which above technologies are applied enables producing more compact and higher-performance vacuum interrupters.

Interruption Graph

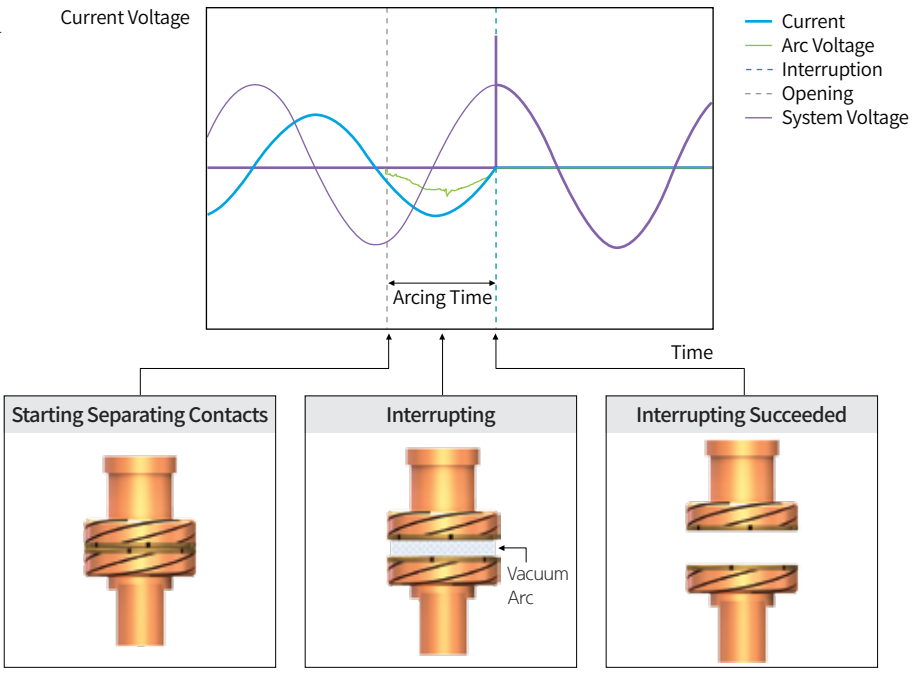

HGV Structure

External Structure

- All components are modular.
- Operation of energy of mechanism is delivered to the VI. Closing spring cannot be electrically or manually charged. Once charging is complete, it automatically hangs on the latch waiting for closing. The breaker performs basic operations with the energy stored in the closing spring.
- Breaker closing operates with the resilience of the spring compressed by a manual button or an electrical signal. By release of closing latch, VI contact is pressurized with an appropriate pressure and at the same time, the trip spring is tensioned to prepare trip. In addition, the discharged closing spring is charged again by motor waiting for the next command. HG-Series Vacuum Circuit Breaker is not only quick in synchronization and load delivery but implements high-speed auto-reclosing function.

Slide-in Module

1. Connection Unit
2. Bushing Cover
3. Shutter
4. Bushing
5. Cradle
6. Conducting Unit
7. Control Jack
8. Breaker (VCB)
9. Truck (Pushing/Drawing Device)

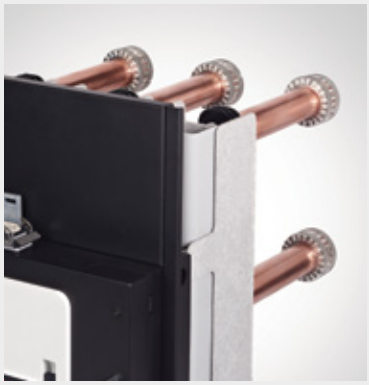

Internal Structure

Trip Free Mechanism

- As for closing command given during trip operation, driving force is not delivered to pole unit but offset by driving mechanism Therefore, VCB remains a trip state without a VI movement.
- This feature is included in the mechanism.

Anti-Pumping Mechanism

- HG-Series Vacuum Circuit Breaker is out of the conventional electrical anti-pumping, but implemented more reliable and mechanical anti-pumping as well.
- This feature is included in the mechanism.

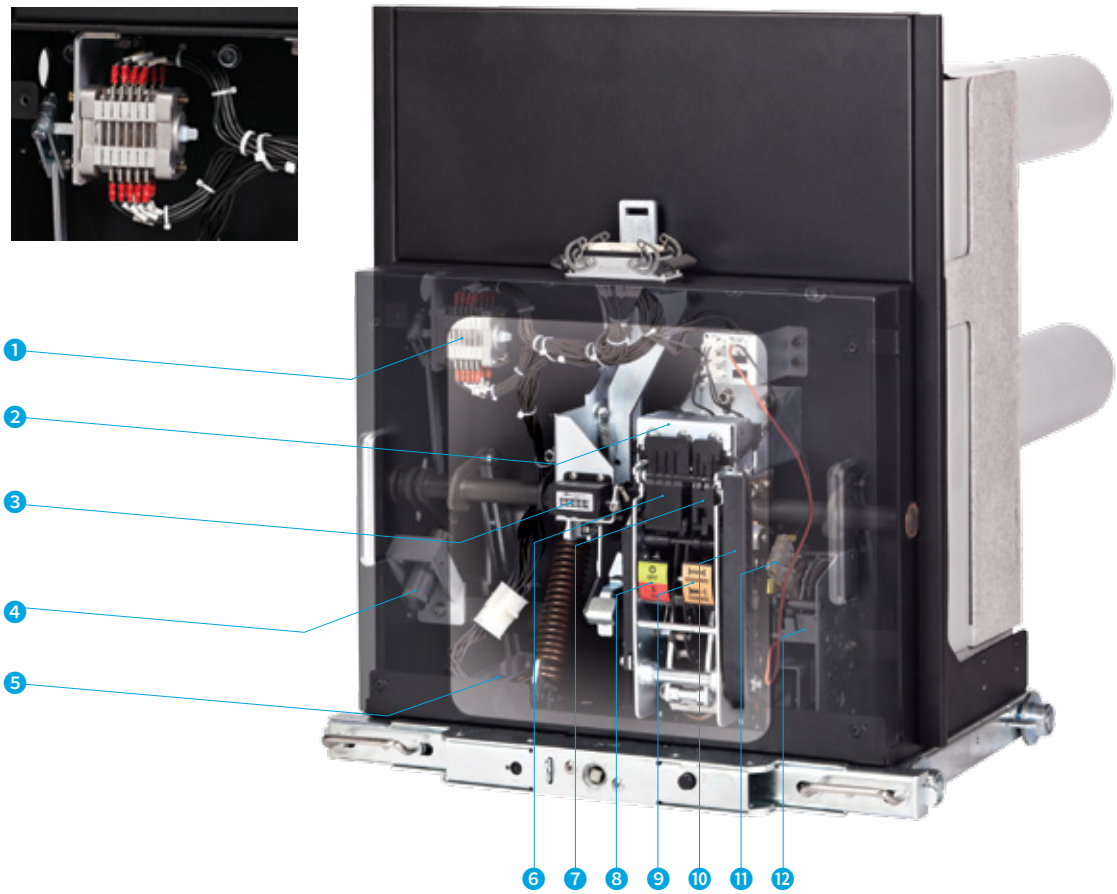

Circuit Breaker Operating Mechanism

1. Auxiliary Switch
2. Closing Coil, Trip Coil
3. Operation Count Indicator
4. Oil Dash Pot
5. Location Dis Playing Switch
6. Manual Trip Button
7. Manual Closing Button
8. ON/OFF Status Indicator
9. Closing Spring Charged Indicator
10. Manual Charging Handle
11. Spring Charged Limit Switch
12. Electric Motor

HGV Operation Structure

ON/OFF Operation Structure and Features

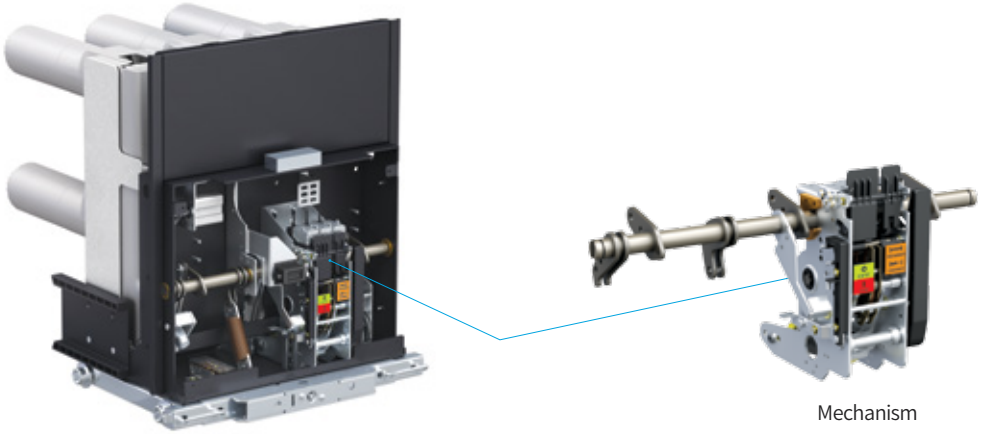

Mechanism

Charging

Once manual handle or motor completes compression of the closing spring, it is fixed onto the latch waiting for closing.

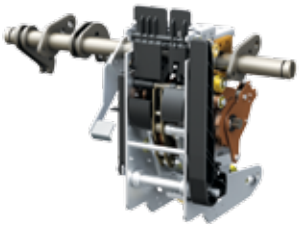

Closing

Once closing signal comes in, compression of the closing spring is release, by the force, VI contacts are pressed until it gets enough pressure.
Further, trip spring gets tension at the same time waiting for the next operation.

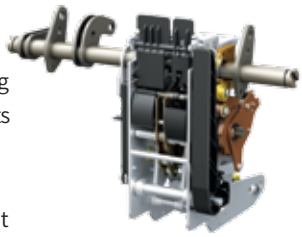

Recharging

After closing operation completed, closing spring can be recharged by manual handle or motor. At this time, if the control power is connected, motor recharges automatically. This is to prepare a high-speed reclosing.

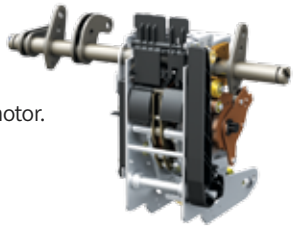

Tripping

If trip signal comes in, VI pressurizing force and trip spring is released returning the VI contacts to the trip position.

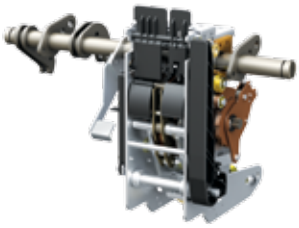

Interlocking

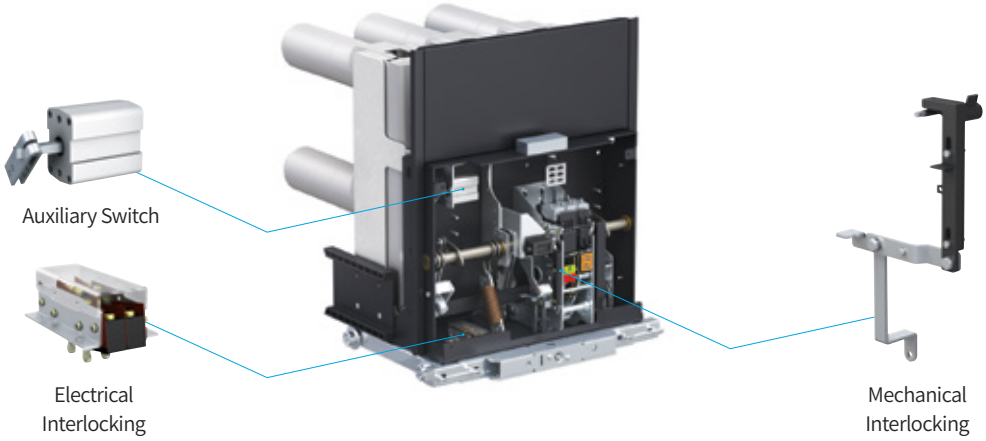

Mechanical Interlocking

Pushing/drawing vacuum circuit breakers are interlocked to allow inserting of pushing/drawing handle only in an open state.
In addition, when the vacuum circuit breaker is in a position apart from service or test position, operation is unavailable (Switching ON/OFF is unavailable).

Electrical Interlocking

The auxiliary switch of the vacuum circuit breaker is linked to the ON/OFF state and the pushing/drawing location information of the breaker to facilitate the interlocking configuration of the panel. Panel interlock monitors the ON/OFF state of the breaker being able to prevent closing of disconnectors when the vacuum circuit breaker is closing.
The system also prevents closing of the vacuum circuit breakers when disconnectors are in an abnormal position.

Reliability of Mechanical Behavior of VI

During ON/OFF operation, insulating rod connection adds, in addition to the pin first, guide to upper part secondly minimizing changes in eccentricity and straightness of VI contacts for mechanism rotation. Also, by avoiding vibration frequency overlap and energy balance between closing spring and VI pressing spring.

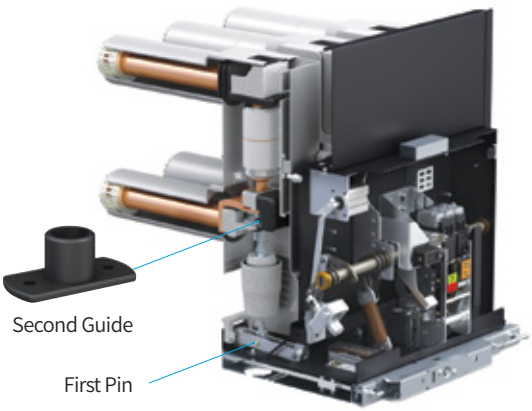

HGV Cradle Structure

ES-Type Cradle

- Structure : Basic cradle made of steel structure
- Main Terminal Mounting:
  Fixing busbar of mold bushing shape into insulator
- Pushing/Drawing-Type : Latch (Lever)
- Safty Shutter: Unapplied
- Applying Switchboard : Cubicle-Type MESG
- Features
  - No direct impact from arc in the event of accident Acropolis. Lightweight, budget cradle
  - Operation is simple and maintenance is easy
  - FS makes modification easy

FS-Type Cradle

- Structure : ES-Type Cradle + Safty Shutter
- Safty Shutter : Applied (Insulating Shutter)
- All application of ES-type are applied
- Features
  - Insulating shutter fully isolates the bus unit and breaker unit resulting in higher protection rate

ES / FS
Type Cradle

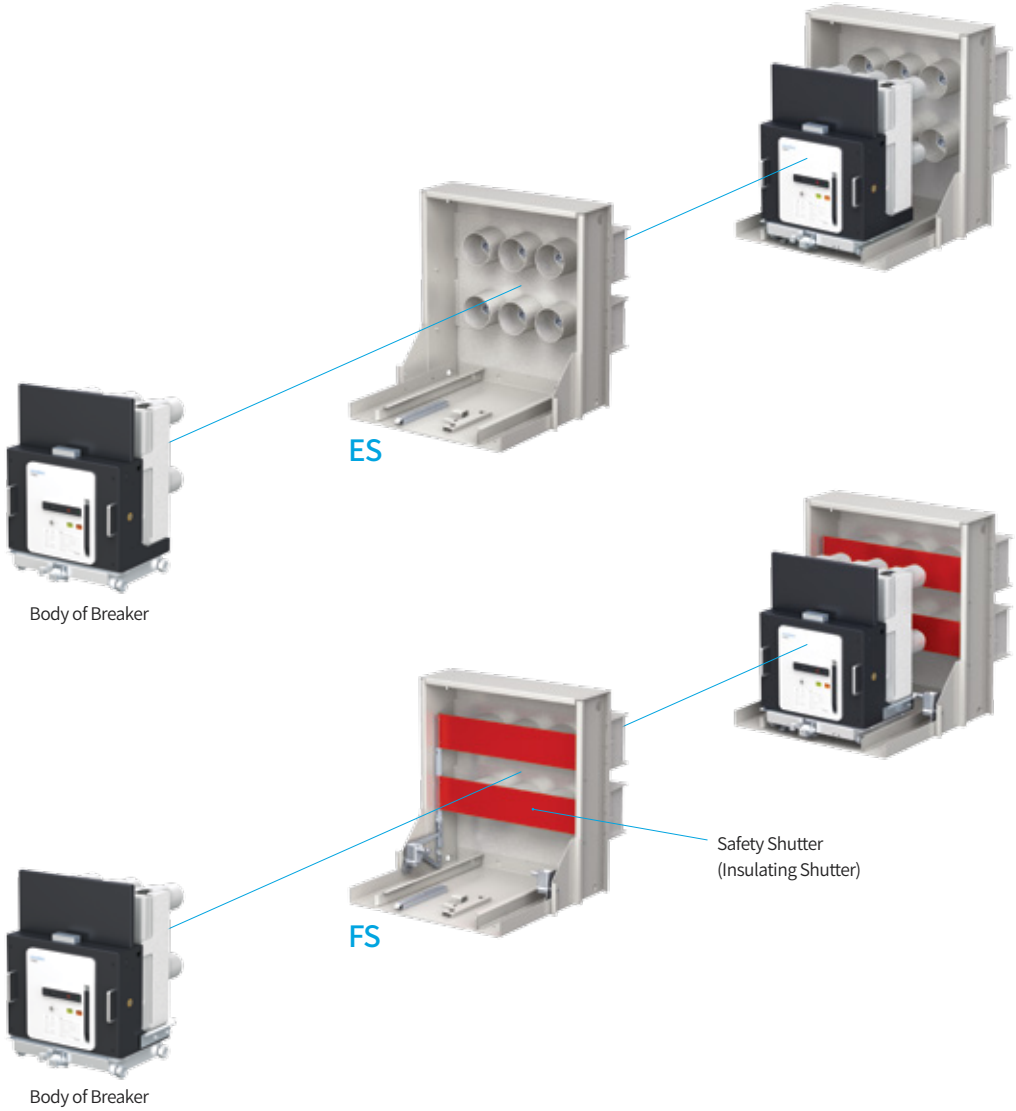

GS-Type Cradle

- Structure : High-end cradle consisted of an optimized steel structure
- Main Terminal Mounting : Fixing busbar with mold bushing
- Pushing/Drawing-Type : Screw (Breaker location inspection is possible)
- Safety Shutter : Applied (Metal Shutter)
- Applied Switchboard : Closed Switchboard (MCSG)
- Features
  - Bus unit and breaker unit is fully isolated with a steel structure preventing spreading of accident and securing stability
  - When connecting bus, insulating cover is applied to secure clearance between phases and minimize insulation processing cost
  - Application of guide to breaker moving unit increased connection reliability and endurance against external shock
  - Earthing switch and related option can be mounted

MS-Type Cradle

- Structure : Top-notch cell-type cradle with an attached door
- All application of GS-Type are applied
- Features
  - Full implementation of panel breaker to reduce costs and maximize convenience
  - Breaker operation available with door closed maximizing safety
  - Earthing switch and related option can be mounted

GS / MS
Type Cradle

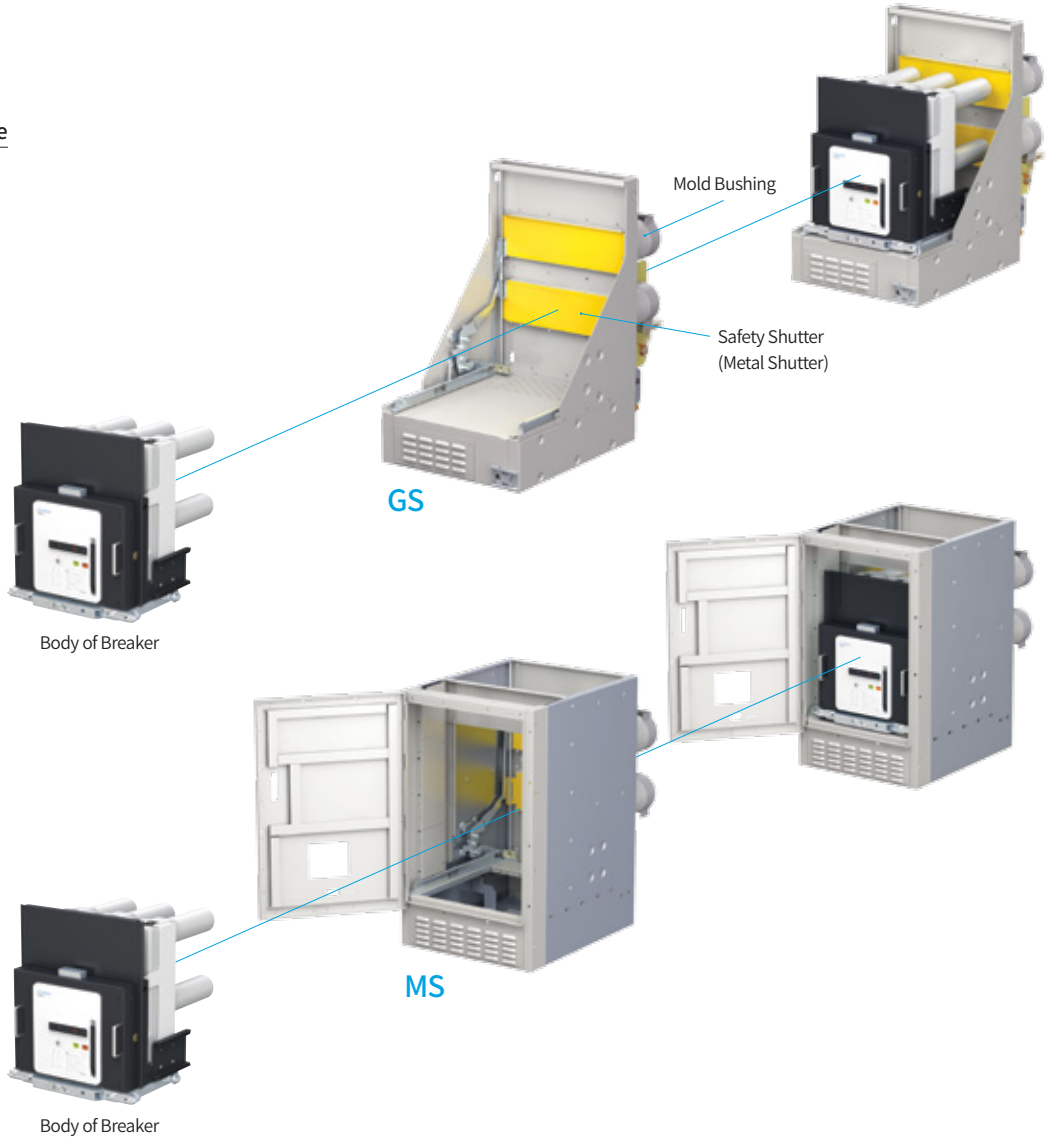

HVF Cradle Structure

VCB is divided into fixed and draw-out type breaker depending on the mounting method. Draw-out type breaker has main circuit connection terminal, pushing/drawing device to connect or disconnect body unit of breaker to bus unit. It also has interlocking device to prevent pushing/drawing of breaker when closing breaker. And it is provided with drawing unit to suitable mounting and convenient use in accordance with various switchgear-type ; there are following-types of drawing units based on the configuration form of bus unit in main circuit :

X-Type Cradle

- Fixed-Type

E-Type Cradle

- Shutter Unattached (For Cubicle-Type Switchboard)

X / ES / FS / SF
Type Cradle

X-Type

E-Type

Lever-Type - ES Type

F-Type

Screw-Type - SF Type

F-Type

Lever-Type - FS Type

F-Type Cradle

- Shutter Mounted (For a Compartment-Type Switchgear)

G-Type Cradle

- Bushing Terminal is used/Shutter Mounted (For a Metal-Clad Switchgear)

IG / GS
Type Cradle

G-Type

Earthing Switch Mounting-Type - GS Type

G-Type

Metal Shutter Mounting-Type - GS Type

G-Type

Safty Shutter Mounting-Type - IG Type

※ However, special breakers for KEPCO hydro and thermal power, MCSG (IEC or ANSI-type) and replacing obsolete breaker are manufactured upon a special order.

For Hyundai Electric's vacuum circuit breakers, various draw-out type VCBs and cradles are designed and manufactured to meet customers' requirements.

HGV Pushing/Drawing

The table below shows operation status and function of each position of the vacuum circuit breaker. See what safety functions are available for each status.

Remove

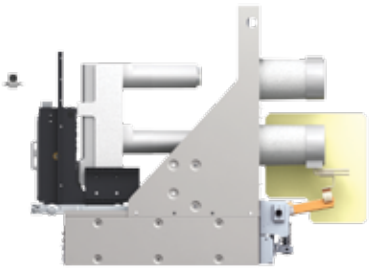

Test Position

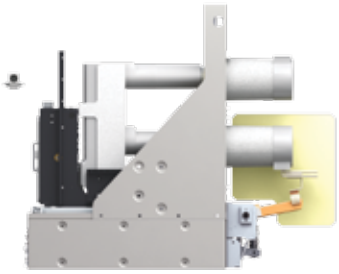

Service Position

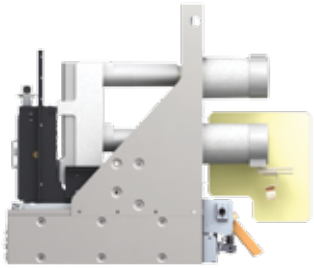

Breaker (VCB) Position	← Position →				Condition	Application Type
	Removed	Test	→→→ Incoming Drawing Out ←←←	Service		
Cradle Shutter					Shutter Padlock Unavailable	HGV, HVF
					Shutter Padlock Available	
Cradle Door					Door cannot Open	HGV, HVF
					Door can Open	
Control Jack					Control Circuit Connector Inseparable	HGV
					Control Circuit Connector Jack can be Separated	
Breaker					Closing, Tripping Unavailable	HGV, HVF, HVG
					Closing, Tripping Available	
Earthing Switch					ES Closing Unavailable	HGV, HVF
					ES Closing Available	

UVC Structure

Internal and External Structure

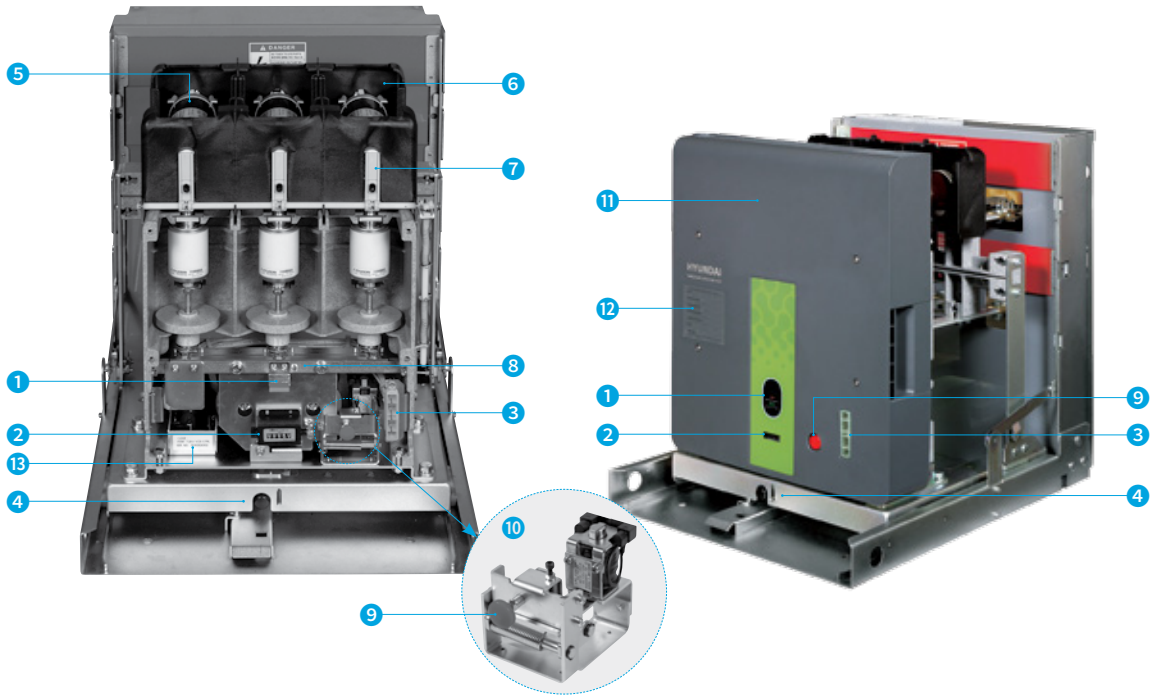

1. Switching Status Indicator
2. Switching Count Indicator
3. Control Plug
4. Pushing/Drawing Button
5. Fuse
6. Fuse Holder
7. Fuse Blow Detector (Optional)
8. Manual Inspection Opening
9. Emergency Trip Button (For Latch-Type)
10. Latch Device (For Latch-Type)
11. Front Cover
12. Nameplate
13. Controllers

Cradle Structure

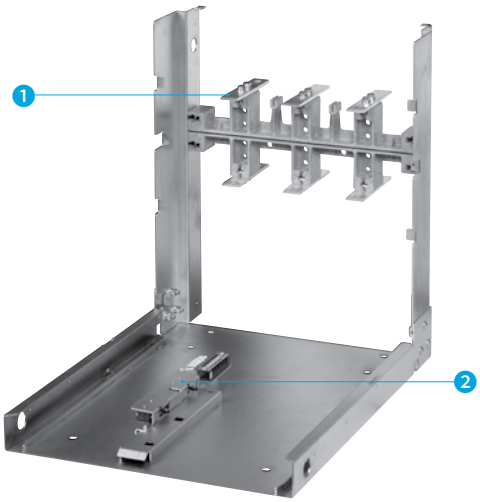

E-Class Cradle

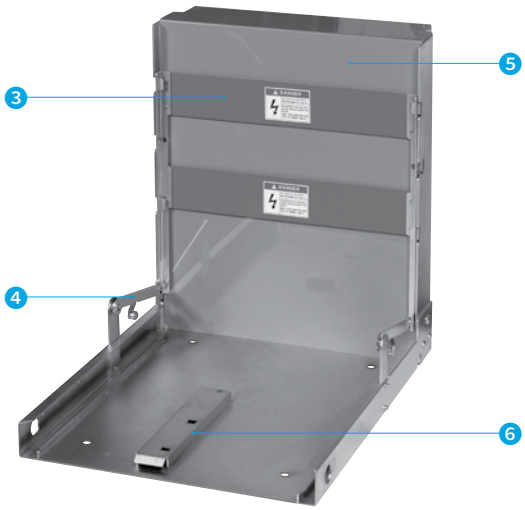

F-Class Cradle

1. Cradle Terminal
2. Position Detecting Switch
3. Shutter
4. Shutter Lifter
5. Rear Barrier
6. Interlock Supporter

UVC Technical Data

Behavior Method Selection

Continuous Type, Latch Type

Continuous Type

- Long mechanical switching life - suitable for frequent opening and closing.
- If you are using a transformer for control power, it is automatically tripped to protect the load when control power fails to supply.

Latch Type

- Shorter switching life compared with the continuous-type.
- It maintains closing status in case of no control power - suitable for systems without continuous control power supply,
- Or loads which needs automatic closing once power is restored.
- As there is a separate trip circuit, use DC power for stable power supply. If you need to use AC power, it is recommended to purchase CTD (Condensor Trip Device) separately for use (See the circuit diagram for connection method)

Closing and Tripping

1. Closing Coil
2. Front Drive Plate
3. Shaft
4. Drive Plate
5. Trip Spring
6. Compression Spring
7. Vacuum Interrupters
8. Insulating Frame

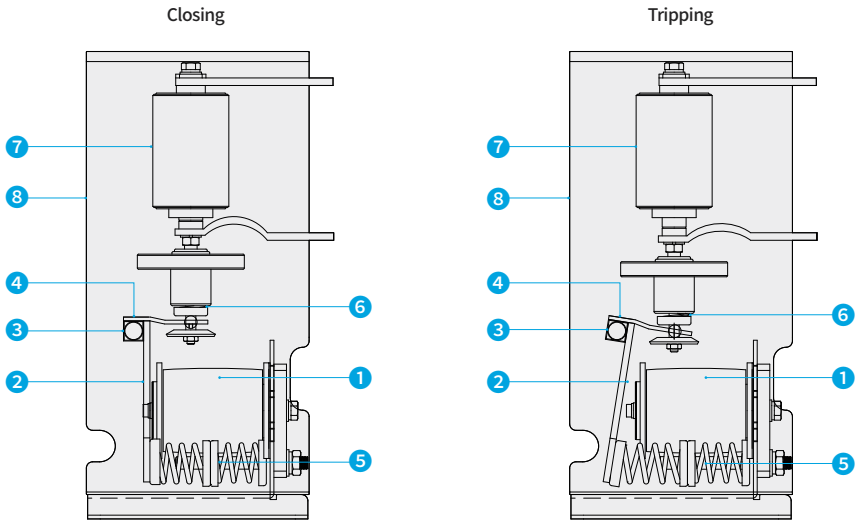

Closing

- When closing coil (1) is magnetized, it pulls the front drive plate (2) and at the same time trip spring is compressed (5). Further, with the shaft (3) on the center, top drive plate (4) pushes driving unit of compression spring (6) and vacuum interrupters (7) making it closing status.
- In a continuous-type, once closing completes, controller automatically reduces the current supplied to closing coil.
- In a latch-type, at the time when closing is completes, the latch device installed on bottom of the product mechanically fixes the front drive plate to maintain closing. At this time, control power is automatically disconnected from the controller.

Tripping

- For continuous-type, interrupting closing coil (1) control power releases magnetization of the coil, compressed trip spring (5) is recovered and tripped.
- For latch-type, providing power to trip coil releases latch that fixed front drive plate and at the same time, compressed trip spring is recovered and tripped.
- For latch-type, trip can be done by condenser trip device installed separately or by manual trip button even in the event of a power failure.
- With the main power applied, draw-out by interlocking device is unavailable for user's safety, make sure to trip before application.

Interlocking Device

Interlock Condition	Interlock Information	Interlock Release	Remarks
With high-pressure vacuum contactor closing, pushing to connecting position is unavailable	The interlock bar built in the body mechanically interrupts pushing	Turn off high-pressure vacuum contactor	Standard Specifications
With high-pressure vacuum contactor closing, pushing from connecting position to testing position is unavailable	The interlock bar built in the body is fixed in the cradle interrupting pushing	Turn off high-pressure vacuum contactor	Standard Specifications
In incorrect segments of each intermediate position, closing is unavailable	If the interlock bar built in the body is not in the right position, it does not mechanically operates	Move high-pressure vacuum contactor to testing and contacting positions and close them.	Standard Specifications
	Electronically control in order not to supply control power if not in the right position		Optional (Electrical Interlock)
High-pressure vacuum contactor stops in the test position	The interlock bar built in the body is fixed in the test position	Press pushing/drawing button	Standard Specifications

If not at the Test or Contacting Position

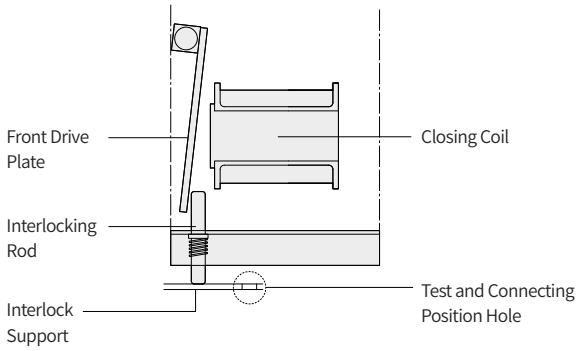

Test and Connecting Positions

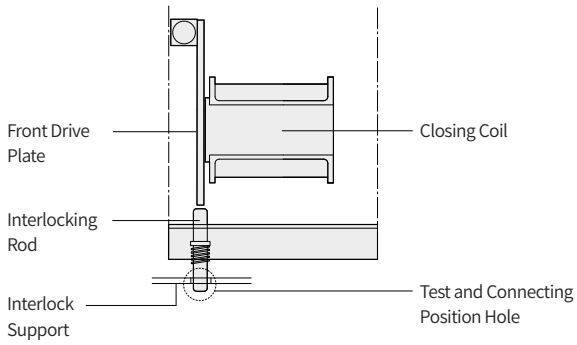

Easily Removable Fuse

Fuse clip of spring pressure shape which does not require bolting is adopted making removal easy at the time of using DIN-type fuse.

Compatible with Older Products

The dimensions of main bus connecting parts are same as older products enabling replacement of them. In this case, the terminal number of control circuit lead cable needs a change.

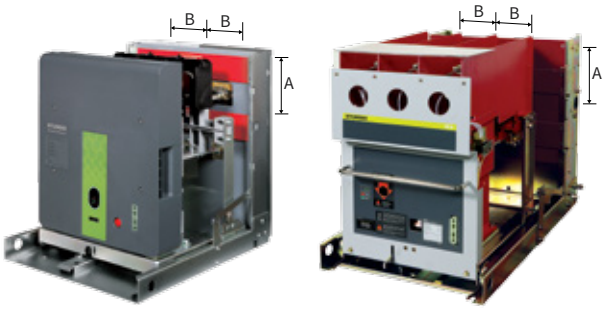

A : Distance between Poles
B : Distance between Phases

UVC Technical Data

Cradle Selection

- High-pressure vacuum contactor is divided into a fixed and draw-out types based on installation method.
- Draw-out has main circuit connection terminal, pushing/drawing device to contact or separate body of the breaker to bus unit, and interlocking device that makes pushing/drawing unavailable at the time of closing. It is provided with a draw-out unit to suitably mount and conveniently use based on various switchgear type ; types of draw-out unit cradles are as follows based on configuration type of main circuit bus unit.

X-Type
Fixed-Type

E-Type
Shutter Unattached
(For Cubicle-Type Switchgear)

F-Type
Shutter Attached
(For Compartment-Type Switchgear)

※ Cradle design and production can be customized depending on customer requirements even when they are not in the catalog.

Vacuum Interrupter

Vacuum interrupter of high-pressure vacuum contactor has the upper and lower stem ❸ and contacts ❶ of conducting unit as well as bellows ❷ and ceramic insulating material ❹ that form a support.
Special contact material enables approximately 1 million operations ; current chopping of 1 A or lower inhibits excessive recovery voltage. Inside of vacuum interrupters is a high degree of vacuum degree of less than 10-6 [mbar] and has a long life.

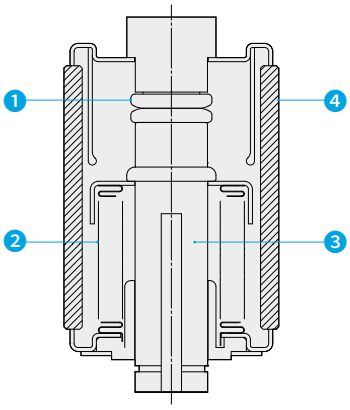

How to Push/Draw (E & F Cradle)

High-pressure vacuum contactor must be placed precisely on the cradle rail at this time. Make sure to use lift to lift contactor for the sake of safety. Sliding the contactor horizontally blocks interlock rod connected to the pushing/drawing button in the test position, making additional pushing unavailable.
In this position, connecting the control power allows testing the internal circuitry as required. In order to insert it into the connection position, push again the pushing/drawing button and slide it inside. When pulling is completed, main circuit connection terminal is fully inserted inside the cradle terminal and the interlock rod is inserted into the connection position hole and gets bound.

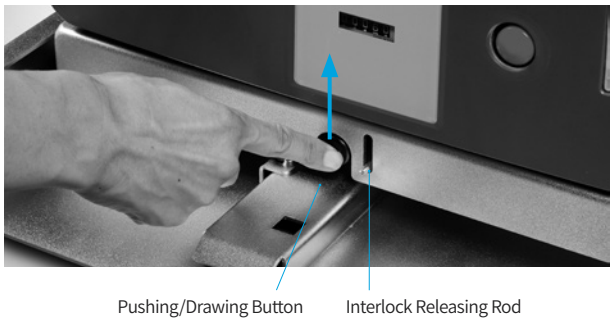

Model Selection Table

7.2 kV

Type			HVG1099□ [1]	HVG1011□	HVG1131□	HVG1132□
Rated Voltage		kV	3.6/7.2	3.6/7.2	3.6/7.2	3.6/7.2
Rated Breaking Current		kA	8	12.5	20	20
Breaking Capacity		MVA	60/100	80/160	125/260	125/260
Rated Conducting Current		A	400	630	630	1,250
Inter-Phase × Inter-Pole Distance						
130×155		mm	◆	◆		
140×155		mm			◉	◉
Installation Method [2]						
Fixed	XA		◆	◆	◉	◉
Draw-Out	ES		◆	◆	◉	◉
	FS		◆	◆	◉	◉
	GS		◆	◆	◉	◉

7.2 kV

Type			HGV114□ [1]			HGV115□					HGV116□					HGV117□				
Rated Voltage		kV	7.2			7.2					7.2					7.2				
Rated Breaking Current		kA	25			31.5					40					50				
Breaking Capacity		MVA	312			393					499					624				
Rated Conducting Current		A	630	1,250	2,000	1,250	2,000	2,500	3,150	4,000	1,250	2,000	2,500	3,150	4,000	1,250	2,000	2,500	3,150	4,000
Inter-Phase × Inter-Pole Distance																				
150×205		mm	●	●																
150×210		mm	■	■																
165×310		mm				★					★									
210×310		mm	△	△	△	△	△				△	△				△	△			
275×310		mm						◈	◈	◈			◈	◈	◈			◈	◈	◈
Installation Method [2]																				
Fixed	XA		●	●	△	★△	△	◈	◈	◈	★△	△	◈	◈	◈	△	△	◈	◈	◈
Draw-Out	ES		■	■																
	FS		■	■																
	GS, GE		●△	●△	△	★△	△	◈	◈	◈	★△	△	◈	◈	◈	△	△	◈	◈	◈
	MS, ME		●	●	△	★△	△	◈	◈	◈	★△	△	◈	◈	◈	△	△	◈	◈	◈

12 kV

Type			HGV214□ [1]			HGV215□					HGV216□					HGV217□				
Rated Voltage		kV	12			12					12					12				
Rated Breaking Current		kA	25			31.5					40					50				
Breaking Capacity		MVA	520			655					831					1,039				
Rated Conducting Current		A	630	1,250	2,000	1,250	2,000	2,500	3,150	4,000	1,250	2,000	2,500	3,150	4,000	1,250	2,000	2,500	3,150	4,000
Inter-Phase × Inter-Pole Distance																				
150×205		mm	●	●																
150×210		mm	■	■																
165×310		mm				★					★									
210×310		mm	△	△	△	△	△				△	△				△	△			
275×310		mm						◈	◈	◈			◈	◈	◈			◈	◈	◈
Installation Method [2]																				
Fixed	XA		●	●	△	★△	△	◈	◈	◈	★△	△	◈	◈	◈	△	△	◈	◈	◈
Draw-Out	ES		■	■																
	FS		■	■																
	GS, GE		●△	●△	△	★△	△	◈	◈	◈	★△	△	◈	◈	◈	△	△	◈	◈	◈
	MS, ME		●	●	△	★△	△	◈	◈	◈	★△	△	◈	◈	◈	△	△	◈	◈	◈

※ 1) □ : Rated Current (1 : 630 A / 2 : 1,250 A / 4 : 2,000 A / 6 : 2,500 A / 7 : 3,150 A / 8 : 4,000 A)
2) E.g. : If inter-phase × inter-pole distance for HGV1141 is 150×210 (mm), ES or FS type can be selected for installation method.
(◆ : 130×155, ◉ : 140×155, ● : 150×205, ■ : 150×210, ★ : 165×310, △ : 210×310, ◈ : 275×310, ☆ : 275×403, ◎ : 275×438)

17.5 kV

Type		HGV314□ 1)			HGV315□					HGV316□					HGV317□				
Rated Voltage	kV	17.5			17.5					17.5					17.5				
Rated Breaking Current	kA	25			31.5					40					50				
Breaking Capacity	MVA	758			955					1,212					1,516				
Rated Conducting Current	A	630	1,250	2,000	1,250	2,000	2,500	3,150	4,000	1,250	2,000	2,500	3,150	4,000	1,250	2,000	2,500	3,150	4,000
Inter-Phase × Inter-Pole Distance																			
150×205	mm	●	●																
150×210	mm	■	■																
210×310	mm	△	△	△	△	△				△	△				△	△			
275×310	mm						◈	◈	◈			◈	◈	◈			◈	◈	◈
Installation Method 2)																			
Fixed	XA	●	●	△	△	△	◈	◈	◈	△	△	◈	◈	◈	△	△	◈	◈	◈
Draw-Out	ES	■	■																
Draw-Out	FS	■	■																
Draw-Out	GS, GE	●△	●△	△	△	△	◈	◈	◈	△	△	◈	◈	◈	△	△	◈	◈	◈
Draw-Out	MS, ME	●	●	△	△	△	◈	◈	◈	△	△	◈	◈	◈	△	△	◈	◈	◈

24/25.8 kV

Type		HGV611□ 1)			HGV614□		
Rated Voltage	kV	24/25.8			24/25.8		
Rated Breaking Current	kA	12.5			25		
Breaking Capacity	MVA	520			1,039		
Rated Conducting Current	A	630	1,250	2,000	630	1,250	2,000
Inter-Phase × Inter-Pole Distance							
210×310	mm	△	△	△	△	△	△
Installation Method 2)							
Fixed	XA	△	△		△	△	△
Draw-Out	ES	△	△		△	△	△
Draw-Out	FS	△	△		△	△	△
Draw-Out	GS, GE	△	△	△	△	△	△
Draw-Out	MS, ME	△	△	△	△	△	△

24/25.8 kV, 36/38 kV

Type		HVF614□ 1)		HVF616□		HVF714□		HVF705□			
Rated Voltage	kV	24/25.8		24/25.8		36		38			
Rated Breaking Current	kA	25		40		25		31.5			
Breaking Capacity	MVA	1,040/1,120		1,662/1,787		1,600		2,000			
Rated Conducting Current	A	2,500	3,150	2,500	3,150	1,250	2,000	1,200 / 1,250	2,000	2,500	3,000 / 3,150
Inter-Phase × Inter-Pole Distance											
275×310	mm	◈	◈	◈	◈						
275×403	mm					☆	☆				
275×438	mm							◎	◎		◎
Installation Method 2)											
Fixed	XA	◈	◈	◈	◈	☆	☆	◎	◎	◎	◎
Draw-Out	GS, GE	◈	◈	◈	◈	☆	☆	◎	◎	◎	◎

※ 1) □ : Rated Current (1 : 630 A / 2 : 1,250 A / 4 : 2,000 A / 6 : 2,500 A / 7 : 3,150 A / 8 : 4,000 A)
2) E.g. : If inter-phase × inter-pole distance for HGV1141 is 150×210 (mm), ES or FS type can be selected for installation method.
(◆ : 130×155, ◉ : 140×155, ● : 150×205, ■ : 150×210, ★ : 165×310, △ : 210×310, ◈ : 275×310, ☆ : 275×403, ◎ : 275×438)

Ratings and Specifications

Rating 7.2 kV

Type		HVG1099□ 1)	HVG1011□ 1)	HVG1131□ 1)	HVG1132□ 1)
Applied Standards		IEC 62271-100 / KSC4611		IEC 62271-100	
Rated Current Ur	kV	7.2 [3.6]			
Rated Short-Time Current	kA/s	8	12.5	20	20
Rated Breaking Current Isc	kA	8	12.5	20	20
Rated Closing Current Ip	kA	20	32.5	52	52
Rated Current	A	400	630	630	1,250
Rated Frequency	Hz	50/60			
Breaking Capacity	MVA	100 [60] 2)	160 [80] 2)	260 [125] 2)	
Standard Operating Duty		O-0.3 sec-CO-3 min-CO		O-0.3 sec-CO-3 min-CO / CO-15 sec-CO	
Withstand Voltage					
Commercial Frequency Withstand Voltage (1 min) Ud	kV	20			
Impulse Withstand Voltage (1.2×50 μs) Up	kV	60			
Opening/Closing Test Ratings					
Mechanical		M2			
Electrical		E1		E2	
Leading Current Opening/Closing		C2			
Rated Circuit Opening Time	ms	≤ 30			
Rated Breaking Time	Cycle	3			
Rated Closing Time	ms	≤ 40			
Closing Operation Method		Electric Motion Spring System			
Auxiliary Contacts		4NO + 4NC, 7NO + 7NC (Up to 10NO + 10NC + 1W Possible)			
Control Power					
Closing Coil		AC 110, 220 / DC 48, 110, 125, 220			
Trip Coil		AC 110, 220 / DC 48, 110, 125, 220			
Opening/Closing Life					
Electrical		See page 41 (Table 3)			
Mechanical		20,000 operations			
Inter-Phase×Inter-Pole Distance 3)					
130×155	mm	◆	◆		
140×155	mm			◉	◉
Installation Method					
Fixed	XA	◆	◆	◉	◉
Draw-Out	ES	◆	◆	◉	◉
Draw-Out	FS	◆	◆	◉	◉
Weight	kg				
Vacuum Circuit Breakers	Fixed	52	63	65	65
Vacuum Circuit Breakers	Draw-Out	52	67	70	70
Cradle	ES				
Cradle	FS				

※ 1) □ : Rated Current (1 : 630 A / 2 : 1,250 A / 4 : 2,000 A / 6 : 2,500 A / 7 : 3,150 A / 8 : 4,000 A)
2) [ ] is a breaking capacity when applied as 3.6 kV.
3) ◆ : 130×155, ◉ : 140×155, ● : 150×205, ■ : 150×210, ★ : 165×310, △ : 210×310, ◈ : 275×310, ☆ : 275×403, ◎ : 275×438
Mechanical opening/closing life is subject to operating environment. Refer to our instruction manual. (Capable of compliance with maintenance)

Rating 7.2 kV

Type			HGV114 □ [1]			HGV115 □ [1]					HGV116 □ [1]					HGV117 □ [1]				
Applied Standards			IEC 62271-100 (2012)																	
Rated Current Ur		kV	7.2																	
Rated Short-Time Current		kA/s	25/4			31.5/4					40/4					50/3				
Rated Breaking Current Isc		kA	25			31.5					40					50				
Rated Closing Current Ip		kA	65			82					104					130				
Rated Current		A	630	1,250	2,000	1,250	2,000	2,500	3,150	4,000 [3]	1,250	2,000	2,500	3,150	4,000 [3]	1,250	2,000	2,500	3,150	4,000 [3]
Rated Frequency		Hz	50/60																	
Breaking Capacity		MVA	312			393					499					624				
Standard Operating Duty			O-0.3 s-CO-15 s-CO																	
Withstand Voltage																				
Commercial Frequency Withstand Voltage (1 min) Ud		kV	20																	
Impulse Withstand Voltage (1.2×50 μs) Up		kV	60																	
Opening/Closing Test Ratings																				
Mechanical			M2 (10,000 operations)																	
Electrical			E2 (List3)																	
Leading Current Opening/Closing			C2																	
Rated Circuit Opening Time		ms	≤ 40																	
Rated Breaking Time		Cycle	3																	
Rated Closing Time		ms	≤ 65																	
Closing Operation Method			Electric Motion Spring System																	
Auxiliary Contacts			4NO + 4NC (Up to 10NO + 10NC)																	
Control Power																				
Closing Coil			DC 24 V, AC/DC 48 ~ 60 V, AC/DC 100 ~ 130 V, AC/DC 200 ~ 250 V																	
Trip Coil			DC 24 V, AC/DC 48 ~ 60 V, AC/DC 100 ~ 130 V, AC/DC 200 ~ 250 V																	
Opening/Closing Life																				
Electrical			See page 39 (Table 2)																	
Mechanical			30,000 operations [2]																	
Inter-Phase×Inter-Pole Distance [4]																				
150×205		mm	●	●																
150×210		mm	■	■																
165×310		mm				★					★									
210×310		mm	△	△	△	△	△				△	△				△	△			
275×310		mm						◈	◈	◈			◈	◈	◈			◈	◈	◈
Installation Method																				
Fixed	XA		●	●	△	★△	△	◈	◈	◈	★△	△	◈	◈	◈	△	△	◈	◈	◈
Draw-Out	ES		■	■																
	FS		■	■																
	GS, GE		●△	●△	△	★△	△	◈	◈	◈	★△	△	◈	◈	◈	△	△	◈	◈	◈
	MS, ME		●	●	△	★△	△	◈	◈	◈	★△	△	◈	◈	◈	△	△	◈	◈	◈
Weight		kg																		
Vacuum Circuit Breakers	Fixed		70	70	110	90	130	170	170	170	90	130	170	170	170	135	135	175	175	175
	Draw-Out		100	105	130	125	160	200	200	200	125	160	200	200	200	165	165	205	205	205
Cradle	ES		55	55																
	FS		60	60																
	GS		70	70	90	85	90	120	120	120	85	90	120	120	120	90	90	120	120	120
	GE		135	135	160	155	160	190	190	190	155	160	190	190	190	160	160	190	190	190
	MS		140	140	160	155	160	190	190	190	155	160	190	190	190	160	160	190	190	190
	ME		210	210	235	230	235	265	265	265	230	235	265	265	265	235	235	265	265	265

※ 1) □ : Rated Current (1 : 630 A / 2 : 1,250 A / 4 : 2,000 A / 6 : 2,500 A / 7 : 3,150 A / 8 : 4,000 A)
2) 10,000 operations are free of charge but subsequent target life can be realized with maintenance. For maintenance specifications, refer to the instruction manual.
3) 4,000 A is met by applying forced circulation method using fan. The fan is driven by a "Thermostat (Temperature Sensors)" and starters except for the fan are not separately provided/sold.
4) ◆ : 130×155, ◉ : 140×155, ● : 150×205, ■ : 150×210, ★ : 165×310, △ : 210×310, ◈ : 275×310, ☆ : 275×403, ◎ : 275×438

Ratings and Specifications

Rating		12 kV																	
Type		**HGV214 □ [1)]**			**HGV215 □ [1)]**					**HGV216 □ [1)]**					**HGV217 □ [1)]**				
Applied Standards		IEC 62271-100 (2012)																	
Rated Current Ur	kV	12																	
Rated Short-Time Current	kA/s	25/4			31.5/4					40/4					50/3				
Rated Breaking Current Isc	kA	25			31.5					40					50				
Rated Closing Current Ip	kA	65			82					104					130				
Rated Current	A	630	1,250	2,000	1,250	2,000	2,500	3,150	4,000 [3)]	1,250	2,000	2,500	3,150	4,000 [3)]	1,250	2,000	2,500	3,150	4,000 [3)]
Rated Frequency	Hz	50/60																	
Breaking Capacity	MVA	520			655					831					1,039				
Standard Operating Duty		O-0.3 s-CO-15 s-CO																	
Withstand Voltage																			
Commercial Frequency Withstand Voltage (1 min) Ud	kV	28 (42) [4)]																	
Impulse Withstand Voltage (1.2×50 μs) Up	kV	75 (82) [4)]																	
Opening/Closing Test Ratings																			
Mechanical		M2 (10,000 operations)																	
Electrical		E2 (List3)																	
Leading Current Opening/Closing		C2																	
Rated Circuit Opening Time	ms	≤ 40																	
Rated Breaking Time	Cycle	3																	
Rated Closing Time	ms	≤ 65																	
Closing Operation Method		Electric Motion Spring System																	
Auxiliary Contacts		4NO + 4NC (Up to 10NO + 10NC)																	
Control Power																			
Closing Coil		DC 24 V, AC/DC 48 ~ 60 V, AC/DC 100 ~ 130 V, AC/DC 200 ~ 250 V																	
Trip Coil		DC 24 V, AC/DC 48 ~ 60 V, AC/DC 100 ~ 130 V, AC/DC 200 ~ 250 V																	
Opening/Closing Life																			
Electrical		See page 39 (Table 2)																	
Mechanical		30,000 operations [2)]																	
Inter-Phase×Inter-Pole Distance [5)]																			
150×205	mm	●	●																
150×210	mm	■	■																
165×310	mm				★					★									
210×310	mm	△	△	△	△	△				△	△				△	△			
275×310	mm						◈	◈	◈			◈	◈	◈			◈	◈	◈
Installation Method																			
Fixed	XA	●	●	△	★△	△	◈	◈	◈	★△	△	◈	◈	◈	△	△	◈	◈	◈
Draw-Out	ES	■	■																
	FS	■	■																
	GS, GE	●△	●△	△	★△	△	◈	◈	◈	★△	△	◈	◈	◈	△	△	◈	◈	◈
	MS, ME	●	●	△	★△	△	◈	◈	◈	★△	△	◈	◈	◈	△	△	◈	◈	◈
Weight	kg																		
Vacuum Circuit Breakers	Fixed	70	70	110	90	130	170	170	170	90	130	170	170	170	135	135	175	175	175
	Draw-Out	100	105	130	125	160	200	200	200	125	160	200	200	200	165	165	205	205	205
Cradle	ES	60	60																
	FS	65	65																
	GS	70	70	90	85	90	120	120	120	85	90	120	120	120	90	90	120	120	120
	GE	135	135	160	155	160	190	190	190	155	160	190	190	190	160	160	190	190	190
	MS	140	140	160	155	160	190	190	190	155	160	190	190	190	160	160	190	190	190
	ME	210	210	235	230	235	265	265	265	230	235	265	265	265	235	235	265	265	265

※ 1) □ : Rated Current (1 : 630 A / 2 : 1,250 A / 4 : 2,000 A / 6 : 2,500 A / 7 : 3,150 A / 8 : 4,000 A)
2) 10,000 operations of operation is free of charge but subsequent target life can be realized with maintenance. For maintenance specifications, refer to the instruction manual.
3) 4,000 A is met by applying forced circulation method using fan. The fan is driven by a "Thermostat (Temperature Sensors)" and starters except for the fan are not separately provided/sold.
4) Select B□ option for order to apply it. □ : 1 (Inter-phase 150 mm), 2 (Inter-phase 210 mm, 25 kA), 3 (Inter-phase 275 mm), 4 (Inter-phase 210 mm, 31.5/40/50 kA)
5) ◆ : 130×155, ◉ : 140×155, ● : 150×205, ■ : 150×210, ★ : 165×310, △ : 210×310, ◈ : 275×310, ☆ : 275×403, ◎ : 275×438

17.5 kV																		24/25.8 kV					
HGV314□ [1]			HGV315 □ [1]					HGV316 □ [1]					HGV317 □ [1]					HGV611 □ [1]			HGV614 □ [1]		
IEC 62271-100 (2012)																		IEC 62271-100 (2012)					
17.5																		24 (25.8)					
25/4			31.5/4					40/4					50/3					12.5/4			25/4		
25			31.5					40					50					12.5			25		
65			82					104					130					32.5			65		
630	1,250	2,000	1,250	2,000	2,500	3,150	4,000 [3]	1,250	2,000	2,500	3,150	4,000 [3]	1,250	2,000	2,500	3,150	4,000 [3]	630	1,250	2,000	630	1,250	2,000
50/60																		50/60					
758			955					1,212					1,516					520			1,039		
O-0.3 s-CO-15 s-CO																		O-0.3 s-CO-15 s-CO					
38																		60					
95																		125					
M2 (10,000 operations)																		M2 (10,000 operations)					
E2 (List3)																		E2 (List3)					
C2																		C2					
≤ 40																		≤ 40					
3																		3					
≤ 65																		≤ 65					
Electric Motion Spring System																		Electric Motion Spring System					
4NO + 4NC (Up to 10NO + 10NC)																		4NO + 4NC (Up to 10NO + 10NC)					
DC 24 V, AC/DC 48 ~ 60 V, AC/DC 100 ~ 130 V, AC/DC 200 ~ 250 V																		DC 24 V, AC/DC 48 ~ 60 V, AC/DC 100 ~ 130 V, AC/DC 200 ~ 250 V					
DC 24 V, AC/DC 48 ~ 60 V, AC/DC 100 ~ 130 V, AC/DC 200 ~ 250 V																		DC 24 V, AC/DC 48 ~ 60 V, AC/DC 100 ~ 130 V, AC/DC 200 ~ 250 V					
See page 39 (Table 2)																		See page 39 (Table 2)					
30,000 operations [2]																		30,000 operations [2]					
●	●																						
■	■																						
△	△	△	△	△				△	△				△	△				△	△	△	△	△	△
					◈	◈	◈			◈	◈	◈			◈	◈	◈						
●	●	△	△	△	◈	◈	◈	△	△	◈	◈	◈	△	△	◈	◈	◈	△	△		△	△	△
■	■																	△	△		△	△	△
■	■																	△	△		△	△	△
●△	●△	△	△	△	◈	◈	◈	△	△	◈	◈	◈	△	△	◈	◈	◈	△	△	△	△	△	△
●	●	△	△	△	◈	◈	◈	△	△	◈	◈	◈	△	△	◈	◈	◈	△	△	△	△	△	△
70	70	110	90	130	170	170	170	90	130	170	170	170	135	135	175	175	175	115	115		115	115	130
100	105	140	125	160	200	200	200	125	160	200	200	200	165	165	205	205	205	145	145	160	145	145	160
70	70																	95	95		95	95	125
75	75																	105	105		105	105	130
70	70	90	85	90	120	120	120	85	90	120	120	120	90	90	120	120	120	95	95	100	95	95	100
135	135	160	155	160	190	190	190	155	160	190	190	190	160	160	190	190	190	175	175	180	175	175	180
140	140	160	155	160	190	190	190	155	160	190	190	190	160	160	190	190	190	180	180	190	180	180	190
210	210	235	230	235	265	265	265	230	235	265	265	265	235	235	265	265	265	265	265	275	265	265	275

Ratings and Specifications

Rating 36 kV

Type		HVF614□ 1)		HVF616□ 1)		HVF714□ 1)			HVF705□ 1)		
Applied Standards		IEC 62271-100									
Rated Current Ur	kV	24/25.8				36			36/38		
Rated Short-Time Current	kA/s	25/3		40/3		25/3			31.5/3		
Rated Breaking Current Isc	kA	25		40		25			31.5		
Rated Closing Current Ip	kA	65		104		65			82		
Rated Current	A	2,500	3,150	2,500	3,150	1,200	2,500	1,200/1,250	2,000	2,500	3,000/3,150
Rated Frequency	Hz	50/60									
Breaking Capacity	MVA	1,040/1,120		1,662/1,787		1,600			2,000		
Standard Operating Duty		O-0.3 sec-CO-3 min-CO / CO-15 sec-CO				O-0.3 sec-CO-3 min-CO					
Withstand Voltage											
Commercial Frequency Withstand Voltage (1 min) Ud	kV	50				70					
Impulse Withstand Voltage (1.2×50 μs) Up	kV	125				170					
Opening/Closing Test Ratings											
Mechanical		M2									
Electrical		E2									
Leading Current Opening/Closing		C2									
Rated Circuit Opening Time	ms	≤ 40		≤ 40		≤ 50			≤ 50		
Rated Breaking Time	Cycle	3		3		5			5		
Rated Closing Time	ms	≤ 75		≤ 75		≤ 85			≤ 70		
Closing Operation Method		Electric Motion Spring System									
Auxiliary Contacts		4NO + 4NC, 7NO + 7NC (Up to 10NO + 10NC + 1W Possible)									
Control Power											
Closing Coil		AC 110, 220 / DC 48, 110, 125, 220									
Trip Coil		AC 110, 220 / DC 48, 110, 125, 220									
Opening/Closing Life											
Electrical		See page 41 (Table 3)									
Mechanical		30,000 operations		20,000 operations		20,000 operations			20,000 operations		
Inter-Phase×Inter-Pole Distance 3)											
275×310	mm	◈	◈	◈	◈						
275×403	mm					☆	☆				
275×438	mm							◎	◎	◎	◎
Installation Method											
Fixed	XA					☆	☆	◎	◎	◎	◎
Draw-Out	GS, GE	◈	◈	◈	◈	☆	☆	◎ 2)	◎ 2)	◎ 2)	◎ 2)
	MS, ME										
Weight	kg										
Vacuum Circuit Breakers	Fixed	200	200	280	280	300	300	340	365	400	400
	Draw-Out	200	200	280	280	300	300	340	365	400	400
Cradle	GS										
	GE										
	MS										
	ME										

※ 1) □ : Rated Current (1 : 630 A / 2 : 1,250 A / 4 : 2,000 A / 6 : 2,500 A / 7 : 3,150 A / 8 : 4,000 A)
2) In case of HVF 70 type, GE is unavailable
3) ◆ : 130×155, ◉ : 140×155, ● : 150×205, ■ : 150×210, ★ : 165×310, △ : 210×310, ◈ : 275×310, ☆ : 275×403, ◎ : 275×438
VCB pole unit body inter-phase distance selection table A : 130, B : 140, C : 150, D : 165, E : 178, F : 210, G : 250, H : 254, I : 275, J : 300, K : 350
In □ of model name, relevant rated current number is filled.
For order of special VCB, contact us in advance.
Report and plate name of 24 kV VCB are issued based on 25.8 kV.
Mechanical opening/closing life is subject to operating environment. Refer to our instruction manual. (Capable of compliance with maintenance)

HGV Characteristics Curve

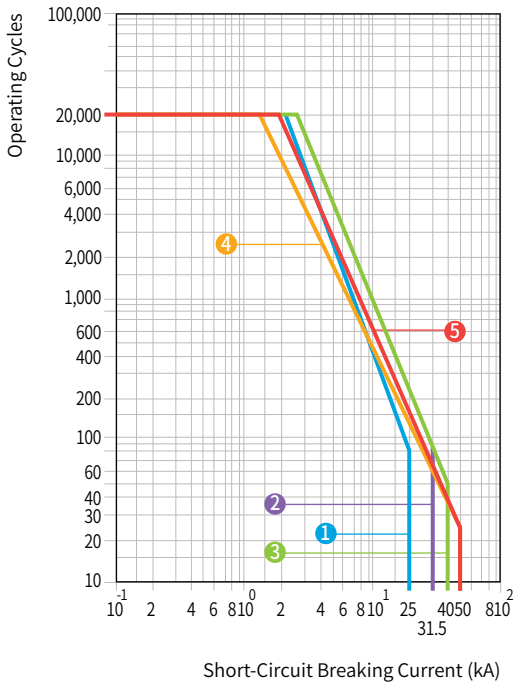

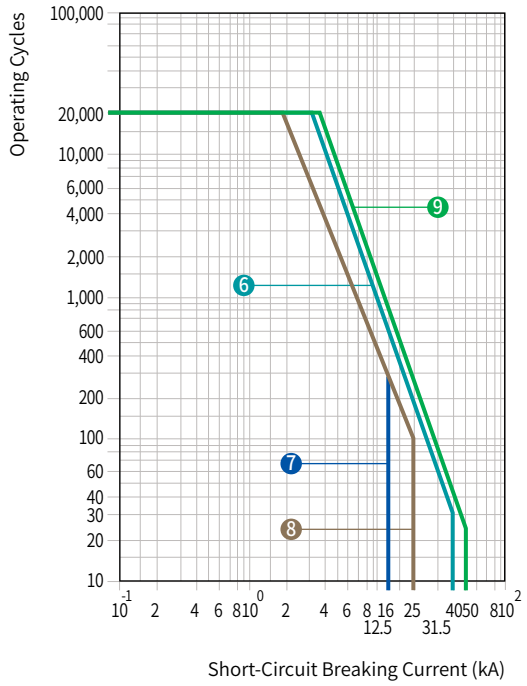

<Table 2> Electrical Opening/Closing Life Curve Number

Rated Voltage (kV)	Breaking Current (kA)	Characteristic Curve Number by Rated Current					
		630 A	1,250 A	2,000 A	2,500 A	3,150 A	4,000 A
7.2	25	1	1	-	-	-	-
	31.5	-	2	2	-	-	-
	40	-	3	3	3	3	3
	50	-	4	5	9	9	9
12	25	1	1				
	31.5		2	2			6
	40		6	6	6	6	
	50		4	5	9	9	9
17.5	25	1	1				
	31.5		2	2			
	40		6	6	6	6	
	50		4	5	9	9	9
24 / 25.8	12.5	7	7				
	25	8	8	8			

Operating Duty

Operating durability and reliability rating is determined under the condition that the breaker repeatedly uses operation once or twice or more for a regulated interval.

Division	Operation Duty	Remarks
Standard Edition	O - 15 s - CO - 3 min - CO	O : Opening C : Closing CO : Closing and Repeatedly Opening
	CO - 15 s - CO	
For High-Speed Reclosing	O - 0.3 s - CO - 3 min - CO	
	O - 0.3 s - CO - 15 s - CO	

Ratings and Specifications

HVG/HVF characteristic curve

With long opening/closing life and easy maintenance, it can be used safely during its lifetime. For details on maintenance, refer to our instruction manual. Electrical opening/closing life is as follows based the rated and breaking current.

<Fig.4>

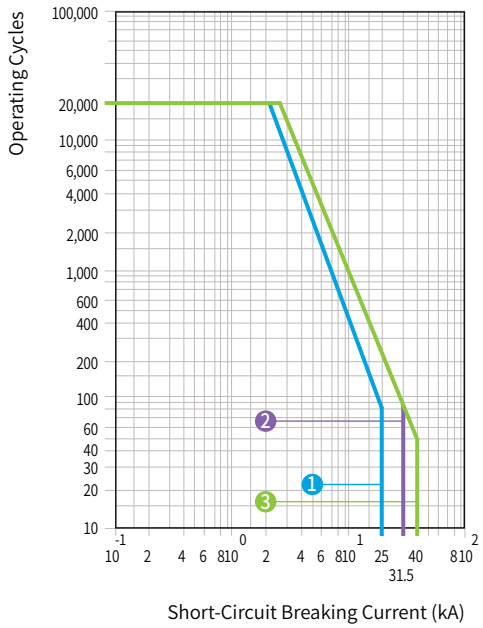

<Fig.5>

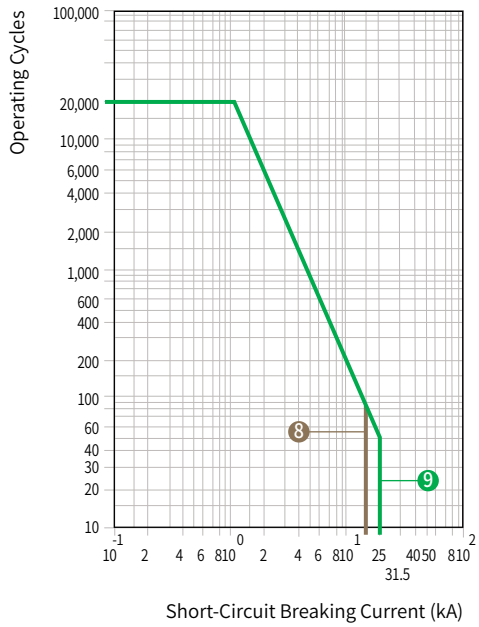

<Fig.6>

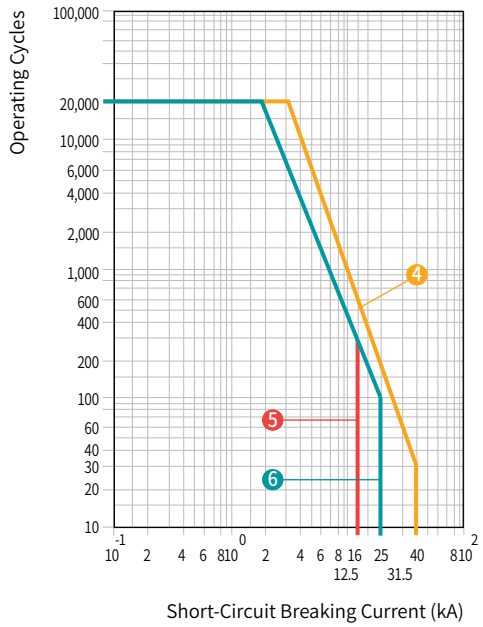

<Fig.7>

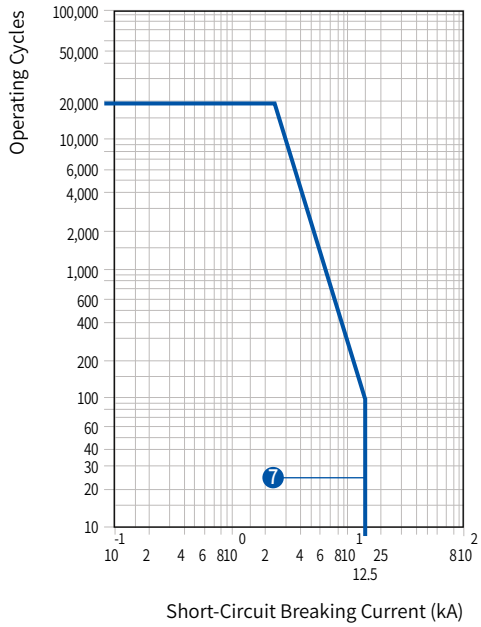

<Table 3> HVG/HVF Type Vacuum Circuit Breaker's Electrical Opening/Closing Life Curve Number and Decision

Model Name		HVG				HVF														
Rated Voltage	kV	7.2				7.2			12			15/17.5			24		36		38	
Rated Breaking Current	kA	8	12.5	20	25	25	31.5	40	25	31.5	40	25	31.5	40	12.5	25	25	31.5	31.5	40
Characteristics Curve Number at Each Rated Current	400 A	8	-	-	-	-	-	-	-	-	-	-	-	-	-	-	-	-	-	-
	630 A	-	8	9	9	1	-	-	1	-	-	1	-	-	5	6	6	-	-	-
	1,250 A	-	-	9	9	1	2	3	1	2	4	1	2	4	5	6	6	2	2	4
	2,000 A	-	-	-	-	-	2	3	-	2	4	-	2	4	-	6	6	-	2	4
	2,500 A	-	-	-	-	-	-	3	-	-	4	-	-	4	-	-	-	2	-	-
	3,150 A	-	-	-	-	-	-	3	-	-	4	-	-	4	-	-	-	-	2	4
	4,000 A	-	-	-	-	-	-	3	-	4	-	-	-	-	-	-	-	-	-	-

Ratings and Specifications (UVC)

Standards Acquisition

- UL347
- NEMA ICS 3

Certification Acquisition

- UL
- cUL
- KAS Certified V Checkmark

Item \ Division		Fixed-Type				Draw-Out			
		X1 Fuse Unattached A1 A2 A3 Fuse Attached				B1 B2 Fuse Unattached D1 D2 D3 D4 D5 D6 Fuse Attached			
Type									
Continuous-Type		UVC32C□	UVC34C□	UVC62C□	UVC64C□	UVC32C□	UVC34C□	UVC62C□	UVC64C□
Latch-Type		UVC32L□	UVC34L□	UVC62L□	UVC64L□	UVC32L□	UVC34L□	UVC62L□	UVC64L□
Rated Breaking Voltage	kV	3.6		7.2		3.6		7.2	
Rated Operating Voltage	kV	3.3		6.6		3.3		6.6	
Rated Frequency	Hz	50/60							
Rated Current	A	200	400	200	400	200	400	200	400
Impact Withstand Voltage	kV	60							
Commercial Frequency Withstand Voltage	for 1 min, kV	20							
Control Circuit Withstand Voltage	for 1 min, kV	2							
Opening/Closing Capacity Category		AC 3							
Breaking Capacity (O–3 min–CO–3 min–CO)	kA	4 (50 MVA@ 7.2 kV)							
Short-Time Current	kA								
1 sec		6.3							
30 sec		3							
Durability	10,000 operations								
Mechanical		100							
Electrical		30							
Control Voltage	V	AC/DC 100 ~ 125 V, AC/DC 220 ~ 230 V							
Aux Contacts		3a2b							
Maximum Load Capacity									
Electric Motor	kW	750	1,500	1,500	3,000	750	1,500	1,500	3,000
Transformer	kVA	1,000	2,000	2,000	4,000	1,000	2,000	2,000	4,000
Condenser	kVAR	750	1,200	1,500	2,000	750	1,200	1,500	2,000
Weight	kg	X1 19				B1 B2 35			
		A1 A2 28				D1 D2 D3 D5 38			
		A3 33				D4 D6 43			

※ For VCS of rated voltage 12 kV, contact our sales team.

Ratings and Specifications (VI)

VI Vacuum Interrupter

High Reliability

High reliability based on 25 years' experience in manufacturing technology

Comprehensive Ratings and Application

- 7.2 kV ~ 24/25.8 kV voltage 25 kA breaking performance
- 7.2 kV ~ 17.5 kV voltage 40 kA breaking performance
- Each rating is in compliance with various international standards

Compact and Lightweight

Compact and lightweight thanks to the advanced contact and isolation technology

Minimized Maintenance

- High reliability and long-lasting lifetime with a very low leakage rate
- Used special material with very low gas content to maintain very vacuum status for a long time

Rating

Type		HCV 3B	HCV 3D	HCV 3E	HCV 3F	HCV 3G	HCV 6A	HCV 6B
Rated Voltage	kV	7.2, 12, 17.5	7.2, 12, 17.5	7.2, 12, 17.5	7.2, 12, 17.5	7.2, 12, 17.5	24, 25.8	24, 25.8
Rated Current	A	630, 1,250, 2,000	1,250, 2,000	2,500, 3,150, 4,000	1,250, 2,000	2,500, 3,150, 4,000	630	630, 1,250, 2,000
Rated Breaking Current. symm	kA	25	31.5/40	31.5/40	50	50	12.5	12.5/25
Electrical Performance								
Rated Closing Current, peak	kA	65	104	104	130	130	32.5	65
Rated Short-Time Current	kA/s	25/4 s	31.5, 40/4 s	31.5, 40/4 s	50/3 s	50/3 s	12.5/4 s	12.5, 25/4 s
Rated Frequency	Hz	50/60	50/60	50/60	50/60	50/60	50/60	50/60
Commercial Frequency Withstand Voltage	kV/min	38 (42)	38 (42)	38 (42)	38 (42)	38 (42)	60	60
Shockwave Withstand Voltage	kV	95	95	95	95	95	125	125
Mechanical Performance								
Contacts Opening Distance	mm	10 ± 1	10 ± 1	10 ± 1	10 ± 1	10 ± 1	12 ± 1	12 ± 1
Max Over Travel	mm	2	2	2	2	2	2	2
Maximum Rebound	mm	2	2	2	2	2	2	2
Average Opening Speed	m/s	1.0 ~ 1.2	1.0 ~ 1.2	1.0 ~ 1.2	1.0 ~ 1.2	1.0 ~ 1.2	1.0 ~ 1.2	1.0 ~ 1.2
Average Closing Speed	m/s	0.9 ~ 1.1	0.9 ~ 1.1	0.9 ~ 1.1	0.9 ~ 1.1	0.9 ~ 1.1	0.9 ~ 1.1	0.9 ~ 1.1
Self-Closing Ability (at full stroke)	kgf	15	25	35	25	35	10	15
Contacts Wear Limits	mm	3	3	3	3	3	3	3
Contacts Bounding	ms	2	2	2	2	2	2	2
No-Load Opening/Closing Live	operations	30,000	30,000	30,000	30,000	30,000	30,000	30,000
Welding Force	kgf	250 ± 10 %	380 ± 10 %	380 ± 10 %	380 ± 10 %	380 ± 10 %	150 ± 10 %	250 ± 10 %

Attachments (HGV)

Circuit Breaker

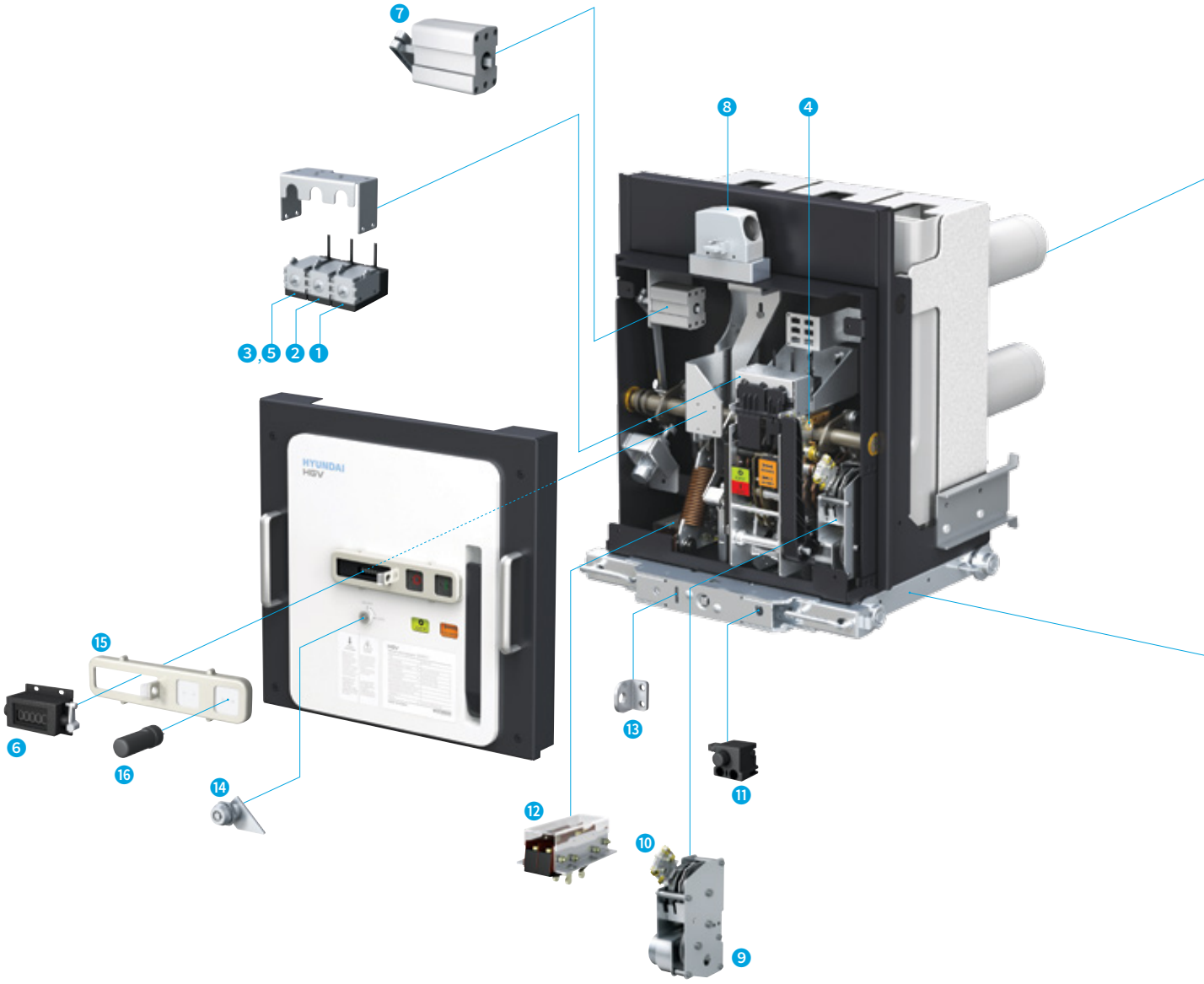

Attachments for Circuit

1. Close Coil
2. Trip Coil
3. Secondary Trip Coil
4. UVR (Under Voltage Release)
5. C.T Operated Release
6. Counter
7. Auxiliary Switch
8. Jack Interlock
9. Electric Motor
10. Spring Charged Limit Switch
11. Door Interlock
12. Position Switch

※ 3, 5 cannot be applied simultaneous

Cradle

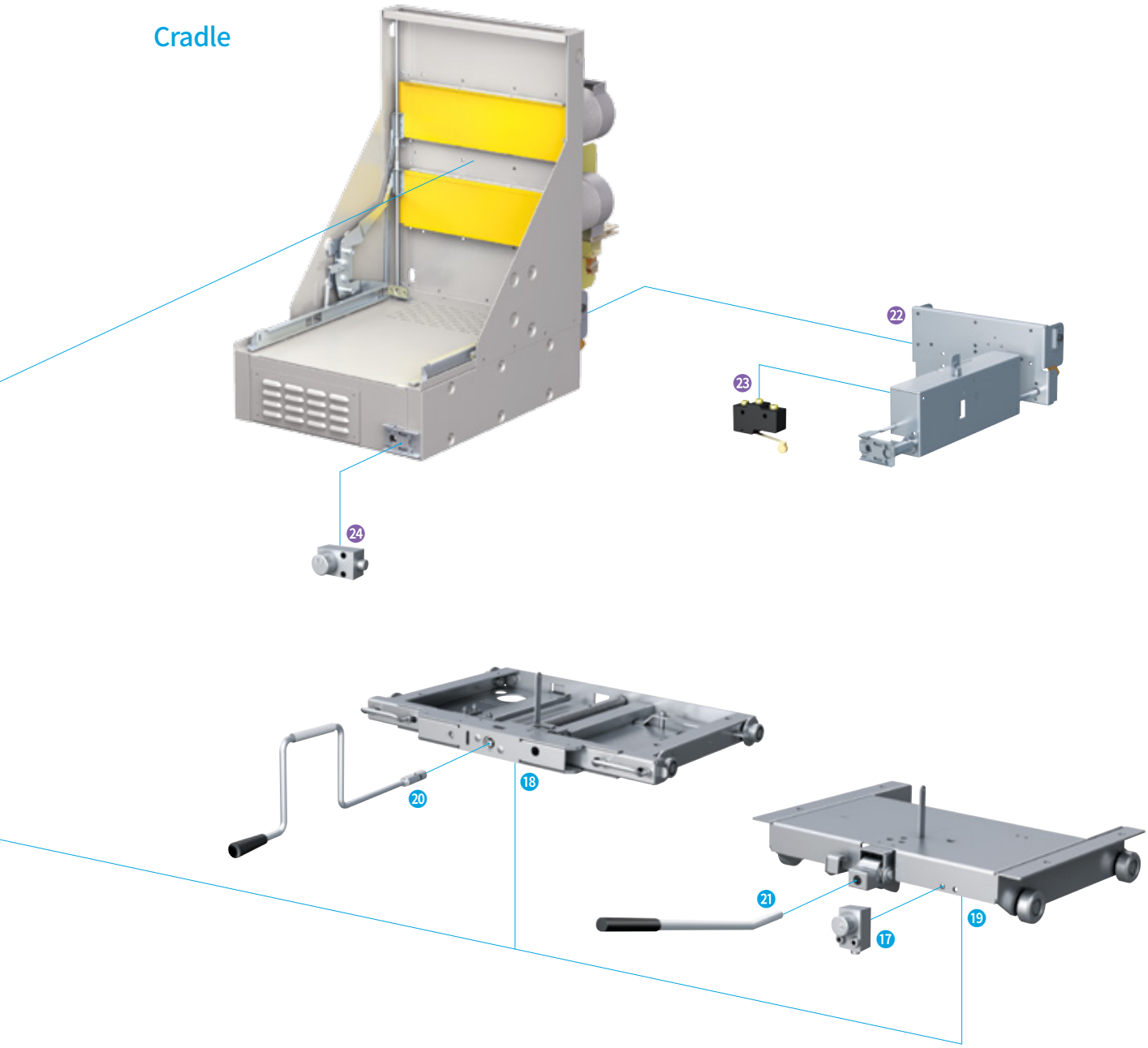

Attachments for Crable

- ⑬ Position Padlock (For G/M Type)
- ⑭ Key Lock
- ⑮ Button Cover
- ⑯ Manual Bar
- ⑰ Position Padlock Kirk Key (For E/F Type)
- ⑱ Pushing/Drawing Device (For G/M Type)
- ⑲ Pushing/Drawing Device (For E/F Type)
- ⑳ Pushing/Drawing Handle (For G/M Type)
- ㉑ Pushing/Drawing Handle (For E/F Type)
- ㉒ Earthing Switch
- ㉓ Earthing Switch Monitor Contact
- ㉔ Earthing Switch Locking Kirk Key

Attachments (HGV)

Basic Attachments

Pushing/Drawing Handle

- Used for pushing/drawing of circuit breaker.
- Only one is provided based on the circuit breaker.
- Standard part supplied according to shipment standard at the time of product shipment.

Counter

- Displays breaker trip count.
- Displays up to 5 digits by default

Pushing/Drawing Device

- Device that moves the breaker into test or service position.
- Default specification is position 2 and only applied to pushing type.
- Relevant pushing/drawing device is attached based on E, F, G and M type of the breaker.

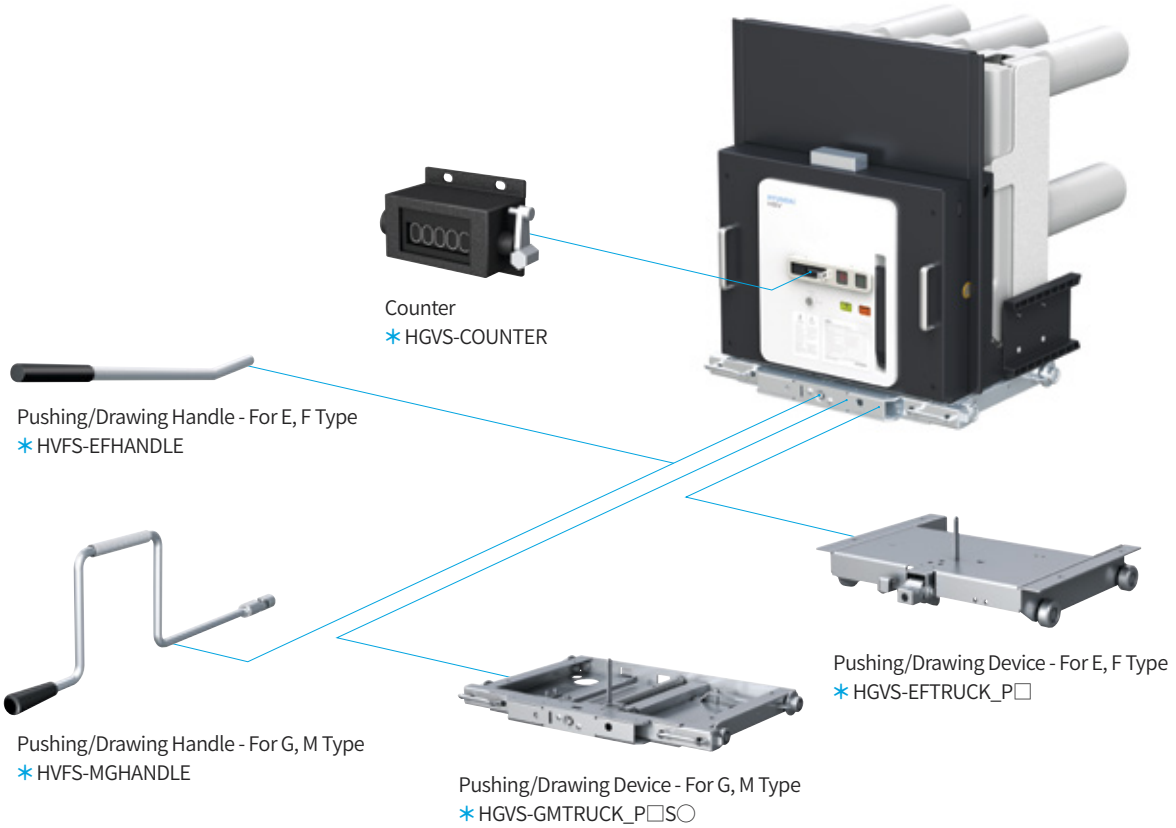

※ ∗ : Order Number for Separate Purchase
□ : Phase-to-Phase Distance (1 : 150 mm, 2 : 165 mm, 3 : 210 mm, 4 : 275 mm)
○ : Pushing/Drawing Distance (1 : 200 mm, 2 : 300 mm)

Trip Coil

- Controlling device that trips breaker by input of below external controlling voltage.
- Attached to breaker by default.

Rating

Item		Contents	
Operating Power		Rated Voltage (Un)	Load Current (A)
	DC	24 V	9.5 A
	AC/DC	48 ~ 60 V	5 A
		100 ~ 130 V	2.5 A
		200 ~ 250 V	1.5 A
Range of Motion		65 ~ 120 %	
Starting Power		DC = 200 W, AC = 200 VA	
Starting Time		approx. 120 ms	
Maintaining Power		DC = 4 W, AC = 4 VA	
Dielectric Strength		2,000 V 50/60 Hz (1 min)	

Close Coil

- Controlling device that closes breaker by input of below external controlling voltage.
- Attached to breaker by default.

Rating

Item		Contents	
Operating Power		Rated Voltage (Un)	Load Current (A)
	DC	24 V	9.5 A
	AC/DC	48 ~ 60 V	5 A
		100 ~ 130 V	2.5 A
		200 ~ 250 V	1.5 A
Range of Motion		80 ~ 120 %	
Starting Power		DC = 200 W, AC = 200 VA	
Starting Time		approx. 120 ms	
Maintaining Power		DC = 4 W, AC = 4 VA	
Dielectric Strength		2,000 V 50/60 Hz (1 min)	

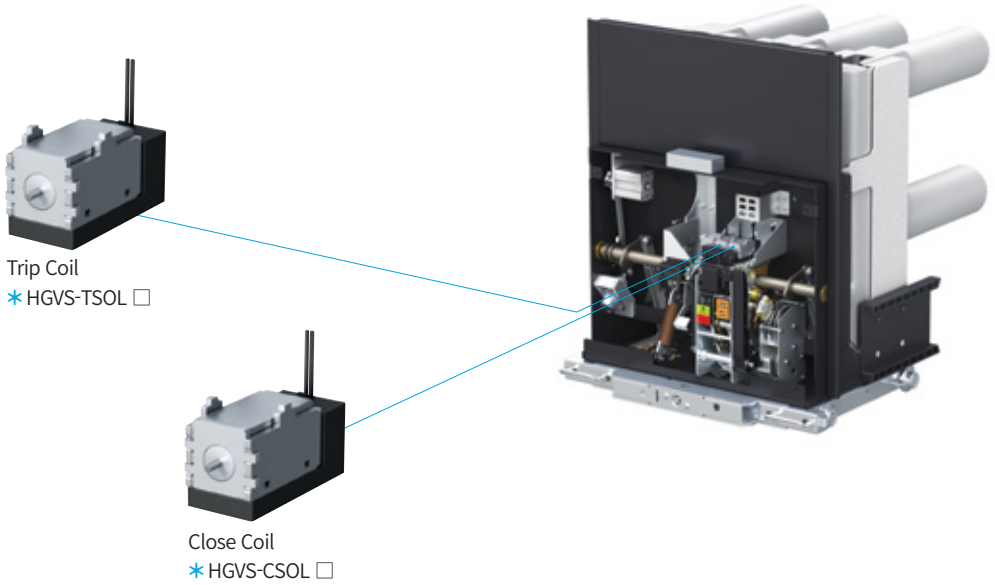

※ ∗ : Order Number for Separate Purchase
□ : Operating Power (1 : DC 24 V, 2 : AC/DC 48 ~ 60 V, 4 : AC/DC 100 ~ 130 V, 6 : AC/DC 200 ~ 250 V)

Attachments (HGV)

Basic Attachments

Auxiliary Switch

- Contact switch used to check on/off status of breaker.
- Electrical signal of breaker on/off is configured with standard contacts of 4NO + 4NC.
- Available up to 10NO + 10NC upon request.

Item	Contents
Name	Control Circuit Connector
Standard	4a + 4b
Selection	10a + 10b

Rating

Item	Contents
Rated Voltage (Un)	AC/DC 24 ~ 250 V
Rated Current (A)	Ith2 = 10 A
Dielectric Strength	2,000 V 50/60 Hz (1 min)
Resistance	3 MΩ

Rated Current and Breaking Capacity in AC and DC Ranges

Voltage	T	In	Icu
AC 220 V	15 ms	2.5 A	25 A
DC 24 V	15 ms	10 A	12 A
DC 60 V	15 ms	6 A	8 A
DC 110 V	15 ms	4 A	5 A
DC 220 V	15 ms	1 A	1.5 A

Time Chart

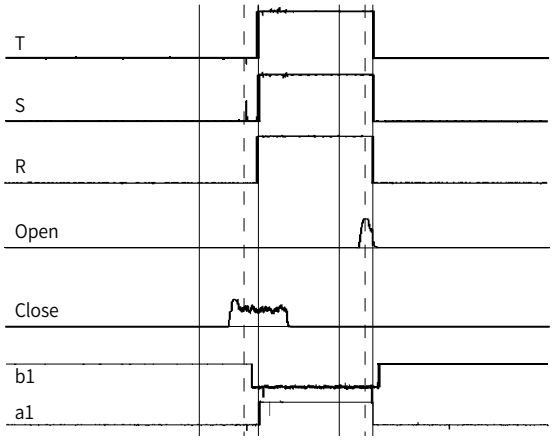

Aux Switch
∗HGVS-ASW□

※ ∗ : Order Number for Separate Purchase
□ : Contacts Configuration (4 : 4NO + 4NC, 10 : 10NO + 10NC)

Electric Motor

- Electric motor that charges close spring.
- Once charging completes, the built-in switch interrupts input control power.
- When control power is connected, it recharges right away once breaker closes.

Spring Charged Limit Switch

- Provides micro-switch contacts for charges/discharged status of close spring (1NO Provided).

Rating

Item		Contents	
Operating Power		Rated Voltage (Un)	Load Current (A)
	DC	24 V	12 A
	AC/DC	48 ~ 60 V	6 A
		100 ~ 130 V	3 A
		200 ~ 250 V	1.5 A
Range of Motion		80 ~ 110 % Un	
25 kA or Less	Starting Power	DC = 500 W, AC = 500 VA	
	Power Consumption	DC = 200 W, AC = 200 VA	
	Starting Time	approx. 0.2 sec	
	Maintaining Power	DC = 5 W, AC = 5 VA	
	Charging Time	3 ~ 5 sec	
	Dielectric Strength	2,000 V 50/60 Hz (1 min)	
31.5 kA or Higher	Starting Power	DC = 900 W, AC = 900 VA	
	Power Consumption	DC = 350 W, AC = 350 VA	
	Starting Time	approx. 0.2 sec	
	Maintaining Power	DC = 5 W, AC = 5 VA	
	Charging Time	3 ~ 5 sec	
	Dielectric Strength	2,000 V 50/60 Hz (1 min)	

Rated Current and Breaking Capacity within AC and DC Ranged

Voltage	T	In	Icu
AC 220 V	15 ms	2.5 A	25 A
DC 24 V	15 ms	10 A	12 A
DC 60 V	15 ms	6 A	8 A
DC 110 V	15 ms	4 A	5 A
DC 220 V	15 ms	1 A	1.5 A

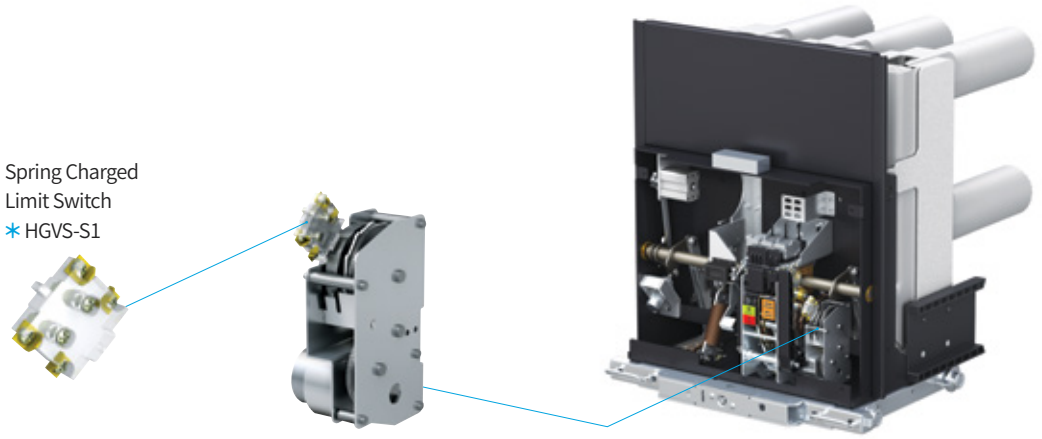

※ ∗ : Order Number for Separate Purchase
□ : Operating Power (1 : DC 24 V, 2 : AC/DC 48 ~ 60 V, 4 : AC/DC 100 ~ 130 V, 6 : AC/DC 200 ~ 250 V)
As motors vary depending on VCB capacity, check it prior to placing an order.

Attachments (HGV)

Basic Attachments

Auxiliary Contacts and Control Cables

- A, B : Provides counter controlling connector and pin to connect to breaker (Lead cable is not supplied).
- C, D : Standard length of lead cable of control circuit is 2.0 m and 0.8 SQ or higher is applied.
- Only either of two above is provided by default. Choose between 4NO + 4NC and 10NO + 10NC.

Control Circuit Connector
∗ HGVS-JACK □

Control Circuit Cable
∗ HGVS-LC □

※ ∗ : Order Number for Separate Purchase
□ : Number of Auxiliary Contact (4 : 4NO + 4NC, 10 : 10NO + 10NC)
Cable installation direction is left by default at the time of product shipment.

Optional Attachments

Secondary Trip Coil

- Double control device that can trip breaker even in the event of problem to trip coil.
- It trips breaker by below external controlling voltage.
- It is placed next to trip coil and cannot be applied at the same time with C.T operated release.

Position Switch

- Contact switch that shows pushing/drawing position of test and service of breaker. It is inside of the breaker.
- For G and M types, default specification is 2NO + 2NC per position.
- For E and F types, default specification is 1NO + 1NC per position.

Rating

Item		Contents	
Operating Power		Rated Voltage (Un)	Load Current (A)
	DC	24 V	9.5 A
	AC/DC	48 ~ 60 V	5 A
		100 ~ 130 V	2.5 A
		200 ~ 250 V	1.5 A
Range of Motion		65 ~ 120 %	
Starting Power		DC = 200 W, AC = 200 VA	
Starting Time		approx. 120 ms	
Maintaining Power		DC = 4 W, AC = 4 VA	
Dielectric Strength		2,000 V 50/60 Hz (1 min)	

For G/M Type

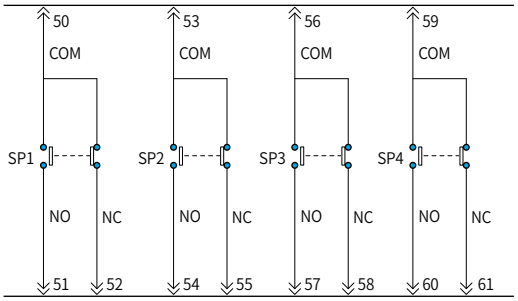

For E/F Type

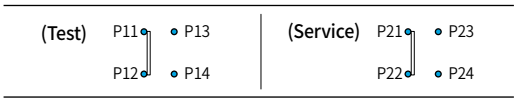

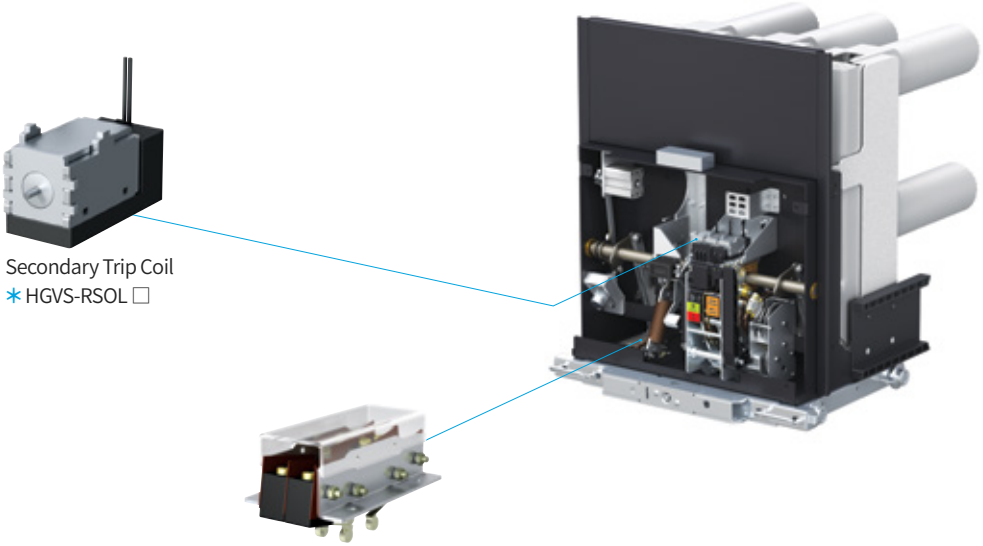

Secondary Trip Coil
∗ HGVS-RSOL □

Position Switch
∗ HGVS-P4 (For G/M)

※ ∗ : Order Number for Separate Purchase
□ : Operating Power (1 : DC 24 V, 2 : AC/DC 48 ~ 60 V, 4 : AC/DC 100 ~ 130 V, 6 : AC/DC 200 ~ 250 V)

Attachments (HGV)

Optional Attachments

UVR (Under Voltage Release)

- Controlling device that automatically trips breaker when external controlling voltage supplied to breaker drops below a certain value.
- By default, instantaneous type is supplied but in order to delay for certain time, integrate it with UVR delay device for use.
- When input control voltage does not reach the range in the below table, breaker cannot close electrically and mechanically.

UVR Time Delay Device

- It is used to delay trip time of breaker for a set time and attached to exterior of breaker to be mounted in panel or cradle.
- Controlling device used in connection with UVR to prevent breaker trip when power network is released due to voltage drop or breaking over a short time.
- Operating voltage must be set as same as UVR.

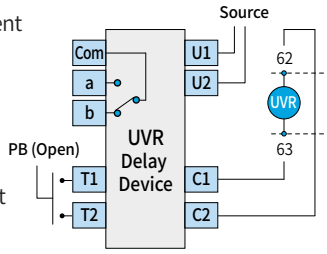

Rating

Item		Contents	
Operating Power		Rated Voltage (Un)	Load Current (A)
	DC	24 V	10.5 A
	AC/DC	48 ~ 60 V	4.3 A
		100 ~ 130 V	2 A
		200 ~ 250 V	1 A
Range of Motion		Drop Out : 4.5 ~ 65 %	
		Pick Up : 65 ~ 80 %	
Starting Power		DC = 200 W, AC = 200 VA	
Starting Time		approx. 120 ms	
Maintaining Power		DC = 4 W, AC = 4 VA	
Dielectric Strength		2,000 V 50/60 Hz (1 min)	

Rating

Item		Contents		
Operating Power		Rated Voltage (Un)	Load Current (A)	
			Inrush State	Normal State
	DC	24 V	10.5 A (200 VA)	1.05 A (4 VA or lower)
	AC/DC	48 ~ 60 V	4.3 A (200 VA)	0.43 A (4 VA or lower)
		100 ~ 130 V	2 A (200 VA)	0.2 A (4 VA or lower)
		200 ~ 250 V	1 A (200 VA)	0.1 A (4 VA or lower)
Range of Motion		Drop Out : 4.5 ~ 65 %		
		Pick Up : 65 ~ 80 %		
Delay Time Setting		0.5, 1.0, 1.5, 3.0 sec		
Dielectric Strength		2,000 V 50/60 Hz (1 min)		

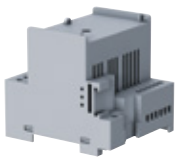

UVR Delay Device
∗ HGVS-UD□

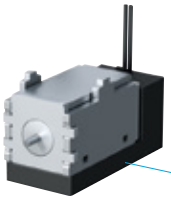

UVR
∗ HGVS-UV□

※ ∗ : Order Number for Separate Purchase
□ : Operating Power (1 : DC 24 V, 2 : AC/DC 48 ~ 60 V, 4 : AC/DC 100 ~ 130 V, 6 : AC/DC 200 ~ 250 V)

Button Cover

- Device to prevent manual on/off of breaker due to erroneous operation of operator.
- When it is applied, manual on/off is unavailable and padlock function can be performed at the same time.
- Lock is not provided by default (Ø10 hole provided).

Key Lock

- Device to lock and release breaker status depending on purpose of operator.
- When locked, electrical and mechanical input is unavailable.
- It can only lock when breaker is tripped.

Position Padlock

- Device to prevent pushing/drawing of breaker during maintenance and operation of operator.
- Lock is not provided by default (Ø8 hole provided).

Door Interlock

- Device that makes pushing/drawing unavailable when panel door is open
- Option only available for MS and ME type cradle.

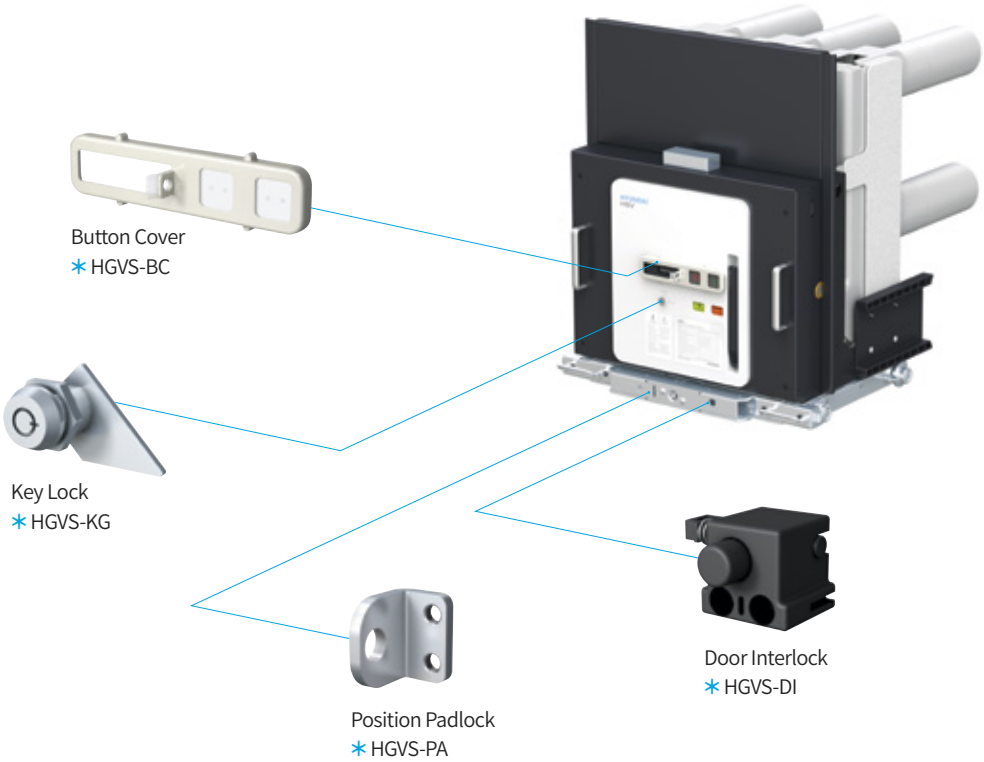

※ ∗ : Order Number for Separate Purchase

Attachments (HGV)

Optional Attachments

C.T Operated Release

- Device that automatically trips breaker with current release that can operate by C. T. secondary current when overcurrent and short circuit occurs.
- It is placed next to trip coil and cannot be applied at the same time with second trip coil.

Rating

Item	Contents
Rated Current	1.0 A
Operating Current	0.85 A

Position Padlock Kirk Key

- Device that locks or releases breaker in the given position.
- It can be mounted when cradle is E or F type.

Manual Bar

- Device that can manually operate breaker with lock hanging on a button cover.
- Only operator should carry it and use it as required.
- This device length is set to be used for breaker only in test positions.

Jack Interlock

- Device that allows pushing/drawing only when control circuit connector on the input side mounted on cradle is normally connected to control circuit connector of breaker
- Control circuit connect cannot be separated when breaker is in service position or being pushed/drawn. Connection and separation is only available in test positions.
- It can be mounted when cradle is G or M type.

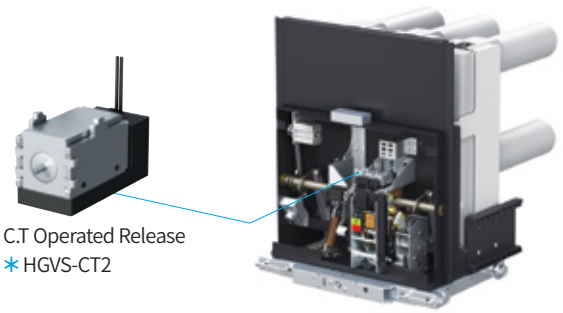

C.T Operated Release
∗ HGVS-CT2

Manual Bar
∗ HGVS-OB

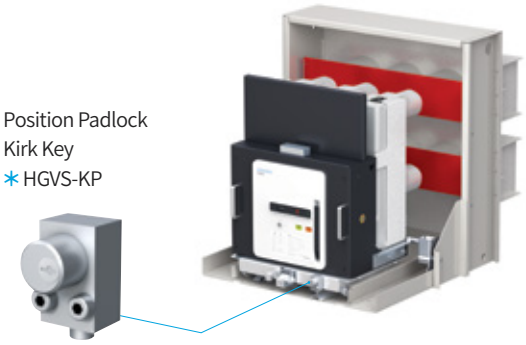

Position Padlock
Kirk Key
∗ HGVS-KP

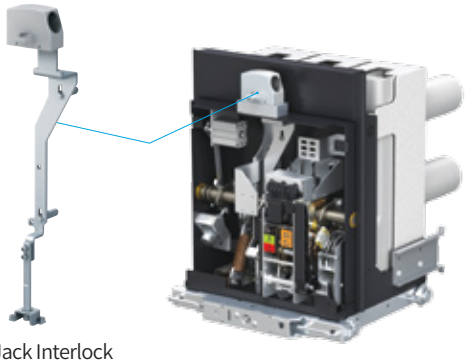

Jack Interlock
∗ HGVS-JI

※ ∗ : Order Number for Separate Purchase

Earthing Switch

- Device that discharges charging current on the load side during panel maintenance or abnormality check in a test position or when breaker is fully drawn out.
- Operation is unavailable when breaker is drawing in. Applicable to G and M types.

Earthing Switch Locking Kirk Key

- Device to prevent operation for safety after maintenance or abnormality check or for other purpose after earthing switch check.

Earthing Switch Monitoring Contacts

- Contacts that display on/off status of grounding when applying earthing switch.
- It is installed to prevent potential accident by arbitrary operation.
- It should be installed with earthing switch and provides 1NO + 1NC contacts.
- It should be selected when mounting earthing switch.

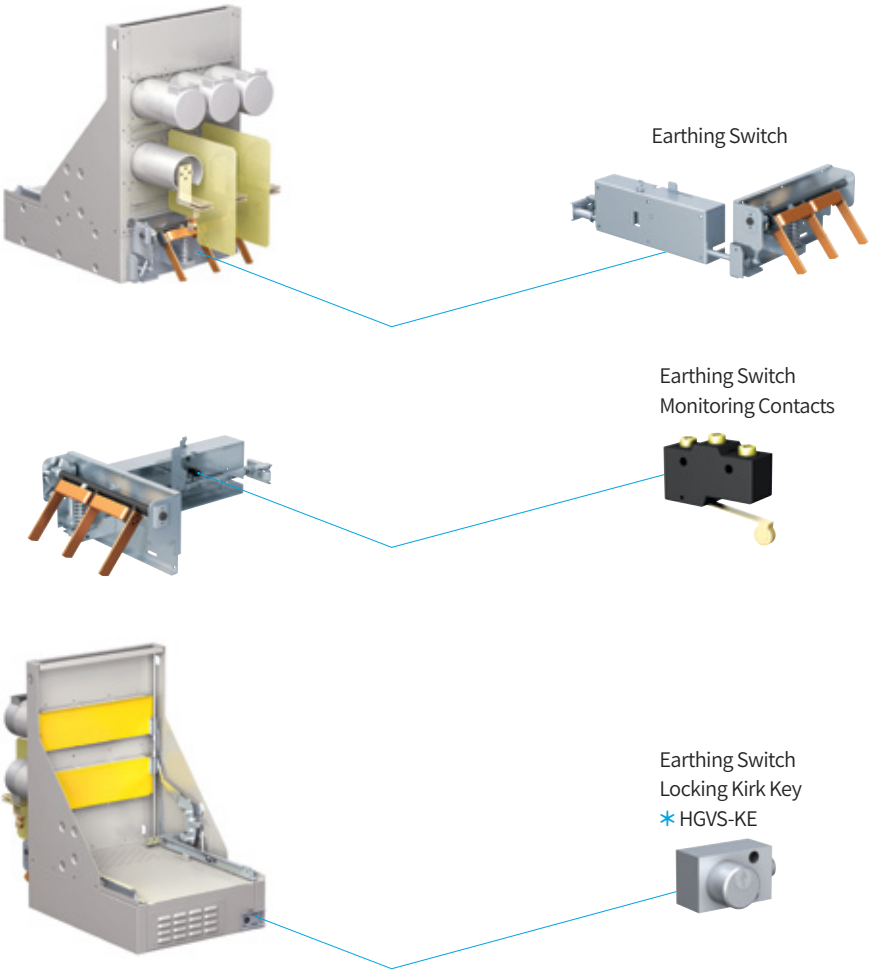

※ ∗ : Order Number for Separate Purchase

Attachments (HGV)

Optional Attachments

Vacuum Checker

Breaking in vacuum circuit breaker is carried out in a vacuum interrupters fully sealed to a very vacuum status. Vacuum interrupters are manufactured in a special process, thus can be used without inspection except for appearance check. However, for more stable operation, customer may use below mobile vacuum checker to inspect vacuum interrupters.

Item	Contents
Order No.	HAFS-VC9
Input Voltage	AC 200 ~ 220 V
Output Voltage	AC 11 kV / AC 22 kV
Weight	22 kg
Shape	Portable

Condensor Trip Device

Attachment with a function to manually or automatically trip breaker using power charged to condenser when control power is not supplied due to a short circuit accidents, etc. when using alternating current power for controlling breaker trip. It has advantages as follows :

- Can automatically trip breaker using No. 3 and 4 contacts of built-in relay and switch operation for setting delay is as follows :
  - ON : Delay (Operation after less than 1.5 sec of delay)
  - OFF : By-Pass (Operation without delay)
- CTD function and rectifying function are combined and as the device is designed to use constant load current within 2 A, no separate rectifying is required.

Item	Contents			
Order No.	HVFS-T7	HVFS-T9	HVFS-T4	HVFS-T6
Rated Input Voltage	AC 110 V	AC 220 V	DC 110 V	DC 220 V
Constant Charging Voltage	DC 145 V	DC 290 V	DC 110 V	DC 220 V
Constant Current Capacity	DC 2 A			
Delayed Current Time	0, 1.5 sec or less [1)]			
Rated Frequency	50/60 Hz		-	

※ 1) For use in combination with VCB, controlling power of trip circuit should be DC.

For AC

Unit : mm

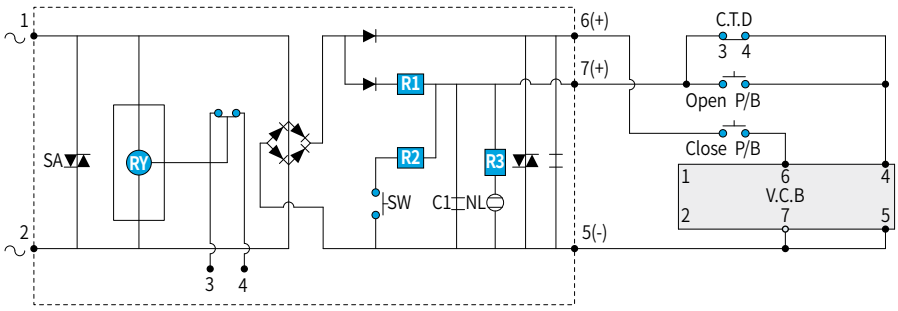

Alternating Current Input Power
NO. 1, 2
Condenser Trip Power
NO. 7 (+), 5 (-)
Direct Current Constant Power
NO. 6 (+), 5 (-)
Delay Contact
(For automatic trip as well)
NO. 3, 4

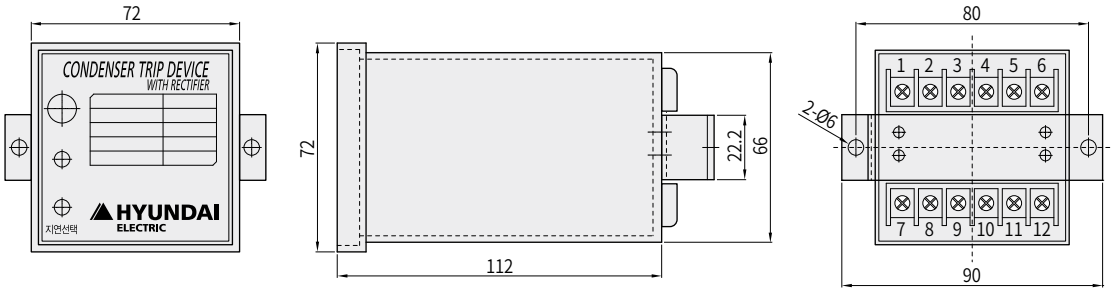

Attachments (HGV)

Order Code for Spare HGV Attachments

Code	Name	Spec
HVFS-MGHANDLE	Pushing/Drawing Handle	G, M Types
HVFS-EFHANDLE		E, F Types
HGVS-GMTRUCK_P□S○	Pushing/Drawing Device	G, M Types
HVFS-EFHANDLE		E, F Types
HGVS-COUNTER	Opening/Closing Counter	
HGVS-CSOL□	Closing Coil	
HGVS-TSOL□	Trip Coil	
HGVS-RSOL□	Secondary Trip Coil	
HGVS-UV□	UVR	
HGVS-UD□	UVR Delay Device	
HGVS-M□	Electric Motor	
HGVS-CT2	C.T Operaterd Release	1.0 A
HGVS-ASW4	Aux Switch	4NO + 4NC
HGVS-ASW10		10NO + 10NC
HGVS-S1	Spring Charged Limit Switch	1NO
HGVS-P2	Position Switch	1NO + 1NC applied for E and F
HGVS-P4		2NO + 2NC applied for G and M
HGVS-BC	Button Cover	
HGVS-OB	Manual Bar	
HGVS-KG	Key Lock	
HGVS-PA	Position Padlock	
HGVS-DI	Door Interlock	
HGVS-KE	Earthing Switch Locking Kirk Key	
HGVS-KP	Position Padlock Kirk key	
HGVS-JACK4	Control Circuit Connector (Single Supply)	4NO + 4NC
HGVS-JACK10		10NO + 10NC
HGVS-LC4	Control Circuit Cable	4NO + 4NC
HGVS-LC10		10NO + 10NC
HAFS-VC9	Vacuum Checker	
HVFS-T4	Condenser Trip Device	Input DC 110 V
HVFS-T6		Input DC 220 V
HVFS-T7		Input AC 110 V
HVFS-T9		Input AC 220 V

※ Product codes vary depending on control voltage and draw-out type, see contents herein.

Attachments (HVF/HVG)

Basic Attachments (HVF)

Code	Name	Spec
HVFS-HANDLE	Charging Handle	HVF, HAF
HVFS-MGHANDLE	Pushing/Drawing Handle	SF Type, M Type, G Type
HVFS-EFHANDLE		E Type, F Type
HAFS-24JACK	Control Circuit Connector	HVF, HAF
HVFS-LEADCABLE (A-Type)	Control Circuit Lead Cable	A-Type
HVFS-LEADCABLE (B-Type)		B-Type

Basic Attachments (HVG)

Code	Name	Spec
HVGS-CHANDLE	Charging Handle	HVF, HAF
HVGS-DHANDLE	Pushing/Drawing Handle	Pushing/Drawing Breaker
HVGS-FLXPLATE	Fixing Plate	Fixed Breaker
See HVF Type	Control Circuit Lead Cable	

※ Handle (HVF Type) : HVF pushing/drawing breaker is used for pushing and drawing of breaker body.
Pushing/Drawing Handle (Pushing/Drawing Breaker) : Used for pushing/drawing of pushing/drawing breaker.
Charging Handle (HVF/HAF/HVG Type) : Used for manual closing spring charging. Also HAF pushing/drawing VCB is used for pushing/drawing of breaker body.
Control Circuit Lead Cable : Standard length is 2.2 m and applies 1.5 SQ or higher. (Applied to A and B types)
Fixed Plate (Fixed Breaker) : Fixed plate for fixed breaker.
Control Circuit Connector : Applied to pushing/drawing jack. (Applied to C and D types)
( ) What is given is parentheses is spare order code.

Attachments (HVF)

Optional Attachments

Secondary Trip Solenoid (Y2)

Additionally attaches and protects the second shunt release in addition to the first shunt release (Trip Solenoid) or can automatically trip breaker by electrical or mechanical operation.

Undervoltage Release (Y7)

Undervoltage release (UVR) can be used to automatically trip breaker when control voltage drops below a certain value. It can be connected to potential transformer but DC operation is available as well. UVR automatically trips breaker when control voltage is less than 35 % of rated value and can close breaker when control voltage is recovered to 85 % or higher. Also, when using UVR, attach electric lockout also to prevent closing of unnecessary breaker when control voltage gets under a certain value.

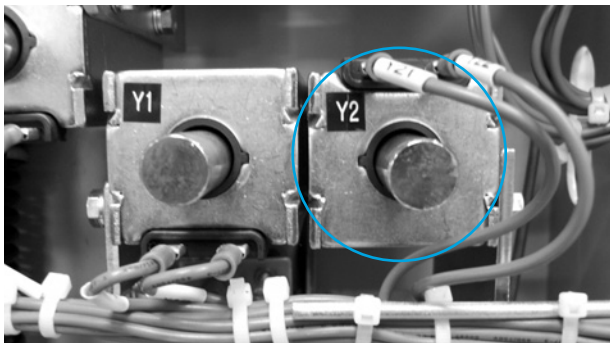

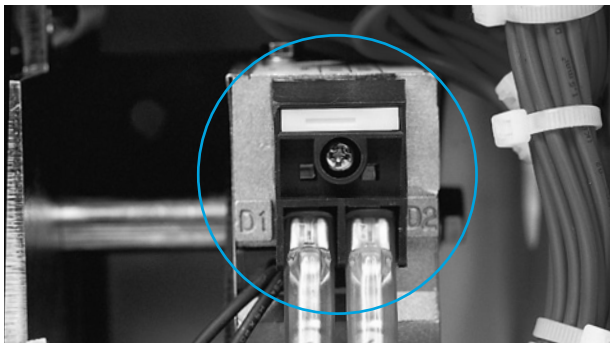

C.T Operated Release (Y4)

Provides automatic trip of breaker with current release that can operate by C.T secondary current when overcurrent and short-circuit occur. Its appearance is same as undervoltage release (Y7).

Item	Contents	
Order No.	HAFS-CT1	HAFS-CT2
Rated Current	0.5 A	1.0 A
Operating Current	0.45 A or higher	0.8 A or higher
Coil Resistance	20 Ω	11 Ω

※ If multiple options are built-in, make sure to discuss with us.
Second trip solenoid (Y2) and Undervoltage Release (Y7) do not apply at the same time.

Electrical Lockout (F1)

Device that makes closing of breaker unavailable when control voltage drops under a certain value and can close of breaker when control voltage recovers to above a certain value.

- Pick-Up :
  85 % or higher of rated voltage
- Drop-Out :
  60 % or less of rated voltage

MOC (M5) : Mechanism Operated Cell Switches

This switch is a mechanical operation switch which operates directly by mechanical structure of breaker when breaker is in operation mode. It can be individually operated and default contact is made up of 5NO + 5NC.
However, installed by default for ANSI draw-out type VCB.

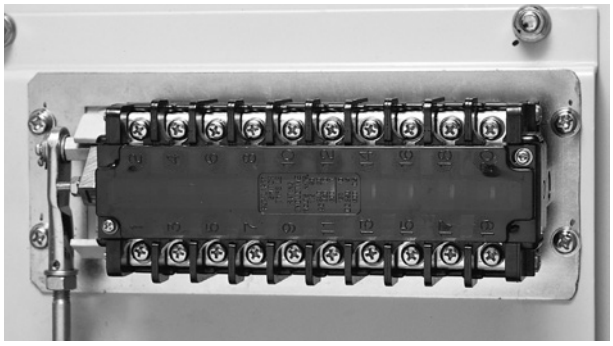

TOC (T3) : Truck Operated Cell Switches

The truck operated cell switch operates when breaker is drawn in from driving position and should not transform if moving unit is not completely connected to driving position. Default contact is made up of 3NO + 3NC. However, it is installed by default for ANSI draw-out type VCB.

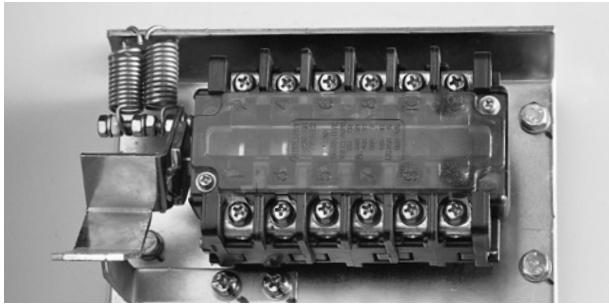

Auto Secondary Jack

This Control Jack is a method that applies to Position 3 that does not breaker to connect on a disconnecting position and automatically connects on test and connection positions.
It is mounted on ANSI VCB by default.

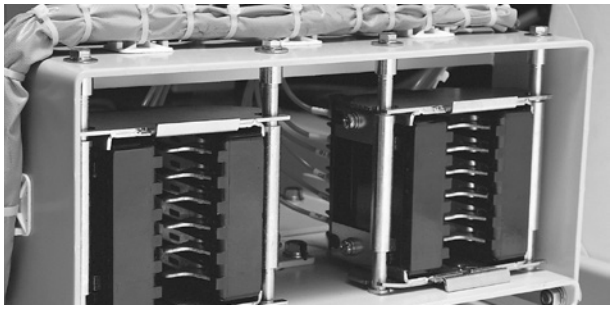

Earthing Switch

Device installed for safety of operator by discharging charging current to the load side for maintenance of switchgear after drawing out breaker or moving it to disconnected position.
It can only be mounted on G type cradle. For detailed mountable models, contact us.

Contacts for Earthing Switch Operation (EE)

Contacts that show operating status (on/off) of earthing switch when using earthing switch. It is installed to prevent potential accidents caused by arbitrary operations and provides 1NO + 1NC contacts.

Spring Charged Signal (S41) Draw-Out

It refers to the electrical function to externally check the status of VCB waiting for closing. It additionally attaches limit switch of charge unit within VCB for application. If without further discussion, draw-out standard is control jack No. 3 and 8.

Button Padlock (Lock Button for Closing and Trip Buttons)

Locking device can be installed on button to prevent potential accident.

- BB : Button Padlock (Close & Open)
- BC : Button Padlock (Close)
- BO : Button Padlock (Open)

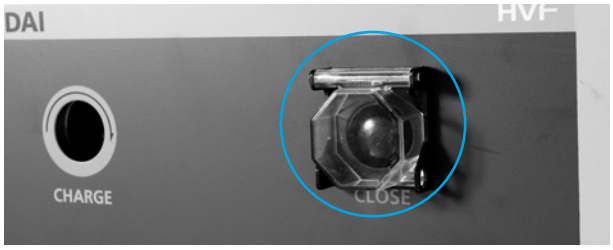

Attachments (HVF/HVG)

Optional Attachments

Varistor Module (V□)

In case the surge that is generated when opening/closing shunt release, soleid, motor of DC control circuit may affect solid-state control device of other control circuit, varistor module can be additionally attached to both sides of motor and solenoid.

Position Switch (P2)

It has functions to electrically display status of test and connection positions of breaker. Default contact draw-out provides 1NO + 1NC per position. However, at a customer request, extension up to 4NO + 4NC per position is available for HVF type VCB only with cable 1.5 SQ or higher and 2.5 MR draw-out as standard.

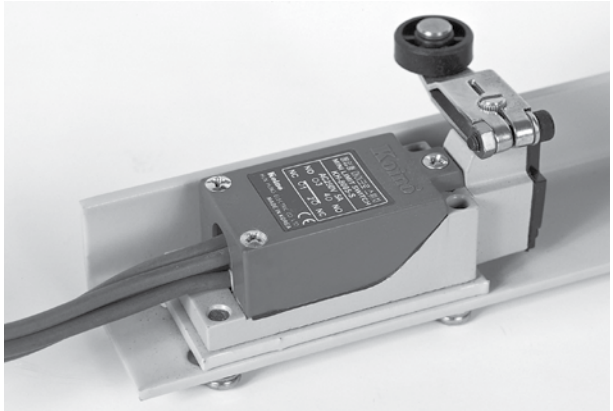

Flame-Retardant Cable (NA, NB)

Auxiliary and control circuit cable. It uses flame-retardant cable for cable distribution based on following methods :

- NA : Auxiliary Contact 4NO + 4NC Application (A and C Type Jack)
- NB : Auxiliary Contact 7NO + 7NC, 10NO + 10NC Application (B and D Type Jack)

Key Lock (KL)

Part that enables locking and releasing of breaker position in a given position.

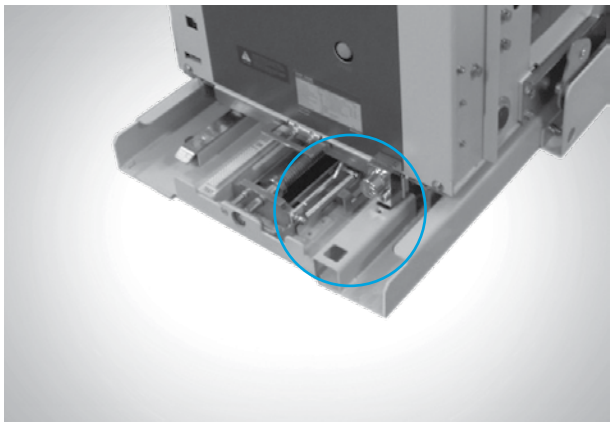

Vacuum Checker

Breaking at vacuum circuit breaker is carried out in a completely vacuum tube in a highly vacuum state ; vacuum tube is manufactured in a special process and can be use without a separate inspection except for exterior check for 20 years. However, for more stable operation, customer may use below mobile vacuum checker to inspect vacuum tube.

Item	Contents
Order No.	HAFS-VC9
Input Voltage	AC 200 ~ 220 V
Output Voltage	AC 11 kV / AC 22 kV
Weight	22 kg
Shape	Portable

Condensor Trip Device

Attachment with a function to manually or automatically trip breaker using power charged to condenser when control power is not supplied due to a short circuit accidents, etc. when using alternating current power for controlling breaker trip. It has advantages as follows :

- Can automatically trip breaker using No. 3 and 4 contacts of built-in relay and switch operation for setting delay is as follows :
  - ON : Delay (Operation after less than 1.5 sec of delay)
  - OFF : By-Pass (Operation without delay)
- CTD function and rectifying function are combined and as the device is designed to use constant load current within 2 A, no separate rectifying is required.

Item	Contents			
Order No.	HVFS-T7	HVFS-T9	HVFS-T4	HVFS-T6
Rated Input Voltage	AC 110 V	AC 220 V	DC 110 V	DC 220 V
Constant Charging Voltage	DC 145 V	DC 290 V	DC 110 V	DC 220 V
Constant Current Capacity	DC 2 A			
Delayed Current Time	0, 1.5 sec or less [1)]			
Rated Frequency	50/60 Hz		-	

※ 1) For use in combination with VCB, controlling power of trip circuit should be DC.

For AC

Unit : mm

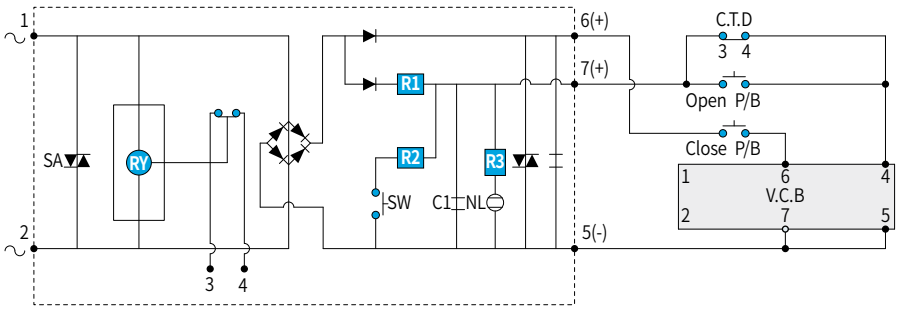

Alternating Current Input Power
NO. 1, 2
Condenser Trip Power
NO. 7 (+), 5 (-)
Direct Current Constant Power
NO. 6 (+), 5 (-)
Delay Contact
(For automatic trip as well)
NO. 3, 4

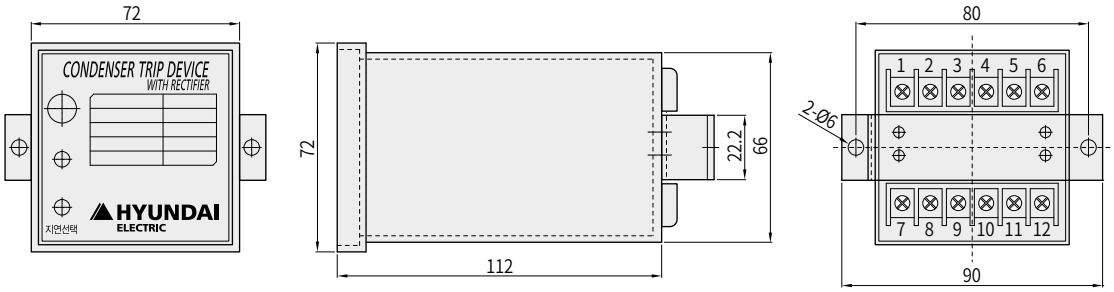

Attachments (HVF/HVG)

Optional Attachments

Trip Circuit Supervision Signal (Tc) Draw-Out

- It is applied to the relay with a function of monitoring abnormality of trip coil among electrical protective relay.
- Without further discussion, draw-out is made with (3).

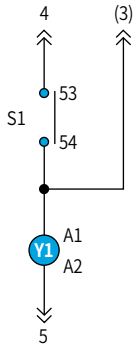

Wiping Contact (WC)

- Aux. Early “B” contact configuration is available when connected parallel with “B” contact in the switch.
- Without further discussion, draw-out is made with (23) and (24) of control Jack.

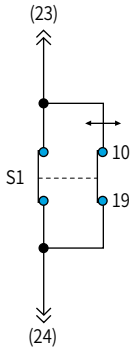

Spring Charged Signal (SI)

- Electrical function to externally check the status of VCB waiting for closing.
- Without further discussion, draw-out is made with (3) and (8) of control Jack.

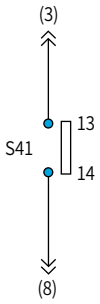

Electro Locking Device (LC)

- Earthing switch operation can be automatically locked using electricity by linking with earthing switch. For operating power, DC is used and DC 100, 125, 220, are 240 V applied.

Order Code for Spare HVF Attachments

HAFS-48Jack / Control Jack / (10NO + 10 NC Cable Type D Type)
HVFS-Controller (DC 48_N) / UVR Controller / DC 48 V
HVFS-Controller (AC/DC 110_N) / UVR Controller / AC/DC 110 V, DC 125 V
HVFS-Controller (AC/DC 220_N) / UVR Controller / AC/DC 220 V

To purchase spare products for vacuum circuit breakers, orders as follows can be placed：

Code	Name	Spec
HAFS-K1□	Anti-Pumping Relay	2：DC 48 V, 4：DC 110 V, 5：DC 125 V, 6：DC 220 V, 7：AC 110 V, 9：AC 220 V
HAFS-M □	Charging Motor	
HAFS-L04 (NEW)	Lockout Relay	AC/DC 110 V, DC 125 V
HAFS-L06 (NEW)	Lockout Relay	AC/DC 220 V
HAFS-SOL□ 1)	Closing Solenoid	2：DC 48 V, 4：DC 110 V, 5：DC 125 V, 6：DC 220 V, 7：AC 110 V, 9：AC 220 V
HVFS-SOL□ 2)	Tripping Solenoid	
HAFS-UV4 (NEW)	Under Voltage Release	AC/DC 110 V, DC 125 V, AC/DC 220 V
HVFS-T4	Condensor Trip Device	DC 110 V
HVFS-T6	Condensor Trip Device	DC 220 V
HVFS-T7	Condensor Trip Device	AC 110 V
HVFS-T9	Condensor Trip Device	AC 220 V
HVFS-T/Jumper	Test Jumper	-
HAFS-ASW4	Auxiliary Switch	4NO + 4NC
HAFS-ASW7	Auxiliary Switch	7NO + 7NC
HAFS-ASW10	Auxiliary Switch	10NO + 10NC
HAFS-L/S	Limit Switch (S1)	1NO + 1NC
HVFS-P/S (NEW)	Position Switch	1NO + 1NC
HAFS-C/ME	Closing Mechanism	-
HAFS-T/ME	Tripping Mechanism	-
HAFS-CT1	CT Operated Release	0.5 A
HAFS-CT2	CT Operated Release	1 A
HAFS-22JACK	Control Jack	4NO + 4NC, Plug and Socket Only (A Type)
HAFS-24JACK	Control Jack	4NO + 4NC, Plug and Socket Only (C Type) 3)
HAFS-44JACK	Control Jack	7NO + 7NC, Plug and Socket Only (B Type)
HAFS-HANDLE	Charging Handle	-
HVFS-EFHANDLE	Draw-Out Handle	ES, FS Cradle
HVFS-MGHANDLE	Draw-Out Handle	GS, CS, MS, SF Cradle
HAFS-VC9 (22 kV)	Vacuum Checker	AC 220 / AC 22 kV
HAFS-VC9 (28 kV)	Vacuum Checker	AC 220 / AC 28 kV
HVFS-LEADCABLE (A-Type)	Lead Cable	4NO + 4NC, Fixed Type
HVFS-LEADCABLE (B-Type)	Lead Cable	7NO + 7NC, Fixed Type

※ 1) For HAF type, use 1) code for both closing and trip.
2) For HVF type, use 1) code for closing, 2) code for trip.
3) For D type, order 2 sets of C type.
For additional UVR option installation, contact us.
For replacement of UVR Controller prior to Oct 2016, UVR requires replacement simultaneously as well. (Not compatible with older UVR)

Attachments (HVG)

Order Code for Spare HVG Attachments

To purchase spare products for vacuum circuit breakers, orders as follows can be placed：

Code	Name	Spec
HAFS-K1□	Anti-Pumping Relay	2：DC 48 V, 4：DC 110 V, 5：DC 125 V, 6：DC 220 V, 7：AC 110 V, 9：AC 220 V
HVGS-M□	Charging Motor	
HVGS-CS□	Closing Solenoid	
HVGS-TS□	Tripping Solenoid	
HVFS-T4	Condensor Trip Device	DC 110 V
HVFS-T6	Condensor Trip Device	DC 220 V
HVFS-T7	Condensor Trip Device	AC 110 V
HVFS-T9	Condensor Trip Device	AC 220 V
HAFS-ASW4	Auxiliary Switch	4NO + 4NC
HAFS-ASW7	Auxiliary Switch	7NO + 7NC
HAFS-ASW10	Auxiliary Switch	10NO + 10NC
HVGS-P/S	Position Switch	1NO + 1NC
HVGS-CAM	Cam for Position Switch	Attached in Breaker Body
HVGS-22JACK	Control Jack	4NO + 4NC, Fixed Type, Plug and Socket Only A Type
HVGS-36JACK	Control Jack	7NO + 7NC, Fixed Type, Plug and Socket Only B Type
HVGS-PL1099	Plug-in Contact	8 kA 400 A
HVGS-PL1131-41	Plug-in Contact	20/25 kA 630 A
HVGS-PL1011	Plug-in Contact	12.5 kA 630 A
HVGS-PL1132-42	Plug-in Contact	20/25 kA 1,250 A
HVGS-CHANDLE	Charging Handle	-
HVGS-DHANDLE	Draw-Out Handle	-
HVGS-FLXPLATE	Fixed Plate	-

Attachments (UVC)

Basic Attachments

Control Circuit Lead Cable

Standard length is 1.5 m and cable is 1.5 SQ (blue).

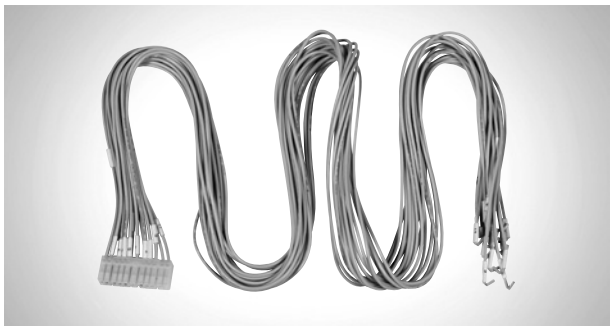

Optional Devices

Position Switch

Device to electrically display the status of test and contact positions of high-pressure vacuum contactor. It provides one c contact in each position.

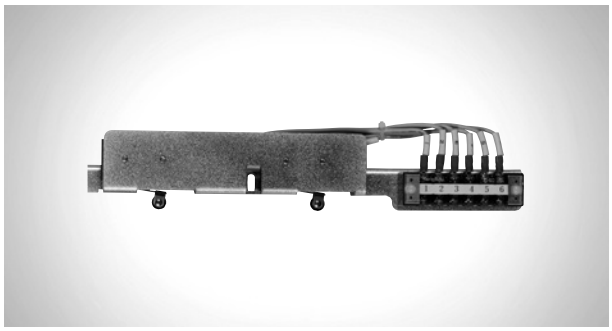

Fuse Melting Indicator

Device that informs melting statue of fuse and it is made up with one c contact.

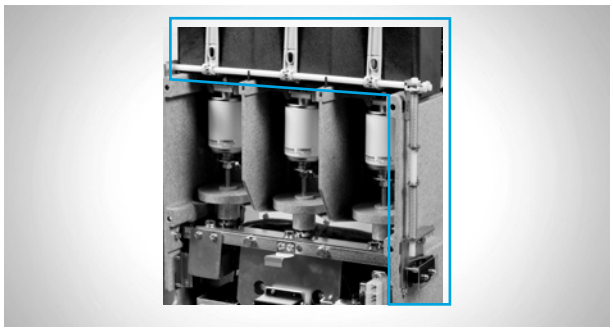

Potential Transformer (P.T)

It lowers the voltage of main busbar on the primary side to 110 V or 220 V to be used as a power of high-pressure vacuum contactor or distribution line devices.

Manual Inspection Handle

It is used for manual inspection of the product with front cover removed.

Electrical Position Interlock

Device that allows supply of high-pressure vacuum contactor power at a correct (Test and connect) positions only. Mechanical interlock that is mechanically provided allows power supply at an incorrect position as well but it makes closing unavailable mechanically.

Attachments (UVC)

Optional Attachments

Condenser Tripping Device (CTD)

Device that can manually or automatically trip breaker using power charged to condenser when control power is not supplied due to a short circuit accidents, etc. when using alternating current power for controlling trip. CTD can be purchased as a spare part only.

Item	Contents	
Order No.	UVCS0013	UVCS0014
Rated Input Voltage	AC 110 V	AC 220 V
Constant Voltage Charging	DC 145 V	DC 290 V
Constant Current Capacity	DC 2 A	
Rated Frequency	50 / 60 Hz	
Time Delay Circuit [1)]	Less than 1.5 sec	
Applied Standards	IEC 60694 / KSC 4611	

※ 1) Customer can choose one without delay as a option.

AC Input Power :
No. 1, 2
DC Continuous Power :
No. 6 (+), 5 (-)
Condenser Trip Power :
No. 7 (+), 5 (-)
Delay Contact :
No. 3, 4

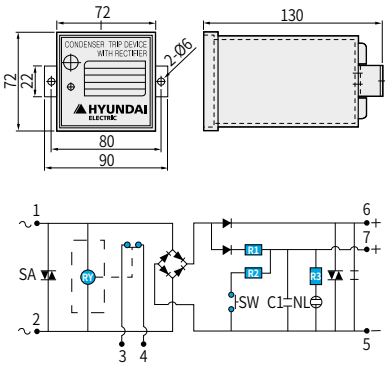

Vacuum Checker

Breaking in vacuum contactor is carried out in a vacuum interrupter fully sealed to a highly vacuum status. Vacuum interrupters are manufactured in a special process, thus can be used without inspection except for appearance check. However, in order to inspect vacuum interrupters for more stable operation, customer can use below mobile vacuum checker.

Item	Contents
Order No.	HAFS-VC9
Input Voltage	AC 200 / 220 V
Output Voltage	AC 11 kV / AC 22 kV
Weight	22 kg
Shape	Portable

Controllers

Electronic controller that provides closing coil current. It has latch and instantaneous type selection switches and for control power AC/DC.

Latch Device

It consists of a trip coil and a latch mechanism unit.
Trip coil can be purchased separately (UVCS0023, UVCS0024) and applies to instantaneous type only.

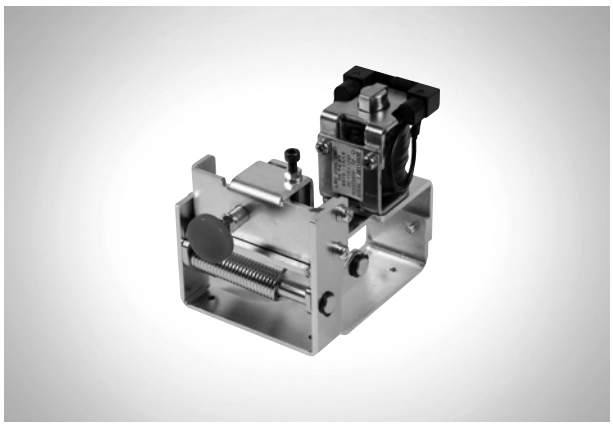

Order Code for Spare UVC Attachments

Code	Spec	Code	Spec
UVCS0001	Open/Close Collector	UVCS6250	Fuse-7.2 kV/250 A/50 kA, 192 mm (SIBA)
UVCS0002	Manual Inspection Handle	UVCS6315	Fuse-7.2 kV/315 A/50 kA, 292 mm (SIBA)
UVCS0003	Latch Device (DC 110 V)	UVCS6355	Fuse-7.2 kV/355 A/50 kA, 292 mm (SIBA)
UVCS0004	Latch Device (DC 220 V)	UVCS7006	Fuse-12 kV/6.3 A/63 kA, 292 mm (SIBA)
UVCS0006	Position Switch	UVCS7010	Fuse-12 kV/10 A/63 kA, 292 mm (SIBA)
UVCS0007	Closing Coil (Continuous-Type) 1)	UVCS7016	Fuse-12 kV/16 A/63 kA, 292 mm (SIBA)
UVCS0008	Closing Coil (Latch-Type) 1)	UVCS7020	Fuse-12 kV/20 A/63 kA, 292 mm (SIBA)
UVCS0009	Potential Transformer (3.3 kV/110 V, 200 VA)	UVCS7025	Fuse-12 kV/25 A/63 kA, 292 mm (SIBA)
UVCS0010	Potential Transformer (3.3 kV/220 V, 200 VA)	UVCS7032	Fuse-12 kV/32 A/63 kA, 292 mm (SIBA)
UVCS0011	Potential Transformer (6.6 kV/110 V, 200 VA)	UVCS7040	Fuse-12 kV/40 A/63 kA, 292 mm (SIBA)
UVCS0012	Potential Transformer (6.6 kV/220 V, 200 VA)	UVCS7050	Fuse-12 kV/50 A/63 kA, 292 mm (SIBA)
UVCS0013	CTD (AC 110 V)	UVCS7063	Fuse-12 kV/63 A/63 kA, 292 mm (SIBA)
UVCS0014	CTD (AC 220 V)	UVCS7080	Fuse-12 kV/80 A/63 kA, 292 mm (SIBA)
UVCS0015	Shutter Set (E Class→F Class)	UVCS7100	Fuse-12 kV/100 A/63 kA, 292 mm (SIBA)
UVCS0016	Control Circuit Lead Cable (1.5 m)	UVCS7125	Fuse-12 kV/125 A/63 kA, 292 mm (SIBA)
UVCS0017	Fuse Holder (For DIN Fuse, Plate Spring Included) 2)	UVCS7160	Fuse-12 kV/160 A/63 kA, 292 mm (SIBA)
UVCS0018	Isolating Contact (Main Circuit Connecting Terminal) 2)	UVCS7200	Fuse-12 kV/200 A/50 kA, 292 mm (SIBA)
UVCS0019	Controller (AC/DC 100 ~ 125 V, AC/DC 200 ~ 230 V)	UVCS2005	Fuse-3.6 kV/5 A/40 kA/G Type (LS)
UVCS0021	E Class Cradle (200/400 A)	UVCS2010	Fuse-3.6 kV/10 A/40 kA/G Type (LS)
UVCS0022	F Class Cradle (200/400 A)	UVCS2020	Fuse-3.6 kV/20 A/40 kA/G Type (LS)
UVCS0023	Trip Coil (DC 110 V)	UVCS2030	Fuse-3.6 kV/30 A/40 kA/G Type (LS)
UVCS0024	Trip Coil (DC 220 V)	UVCS2040	Fuse-3.6 kV/40 A/40 kA/G Type (LS)
HVC00703	Vacuum Interrupters for Vacuum Contactor (7.2 kV 400 A) 3)	UVCS2050	Fuse-3.6 kV/50 A/40 kA/G Type (LS)
UVCS6006	Fuse-7.2 kV/6.3 A/63 kA, 192 mm (SIBA)	UVCS2060	Fuse-3.6 kV/60 A/40 kA/G Type (LS)
UVCS6010	Fuse-7.2 kV/10 A/63 kA, 192 mm (SIBA)	UVCS2075	Fuse-3.6 kV/75 A/40 kA/G Type (LS)
UVCS6020	Fuse-7.2 kV/20 A/63 kA, 192 mm (SIBA)	UVCS2100	Fuse-3.6 kV/100 A/40 kA/G Type (LS)
UVCS6025	Fuse-7.2 kV/25 A/63 kA, 192 mm (SIBA)	UVCS2150	Fuse-3.6 kV/150 A/40 kA/G Type (LS)
UVCS6032	Fuse-7.2 kV/31.5 A/63 kA, 192 mm (SIBA)	UVCS2200	Fuse-3.6 kV/200 A/40 kA/G Type (LS)
UVCS6040	Fuse-7.2 kV/40 A/63 kA, 192 mm (SIBA)	UVCS2300	Fuse-3.6 kV/300 A/40 kA/G Type (LS)
UVCS6050	Fuse-7.2 kV/50 A/63 kA, 192 mm (SIBA)	UVCS2400	Fuse-3.6 kV/400 A/40 kA/G Type (LS)
UVCS6063	Fuse-7.2 kV/63 A/63 kA, 192 mm (SIBA)	UVCS3020	Fuse-3.6 kV/20 A/40 kA/M Type (LS)
UVCS6080	Fuse-7.2 kV/80 A/63 kA, 192 mm (SIBA)	UVCS3050	Fuse-3.6 kV/50 A/40 kA/M Type (LS)
UVCS6100	Fuse-7.2 kV/100 A/63 kA, 192 mm (SIBA)	UVCS3100	Fuse-3.6 kV/100 A/40 kA/M Type (LS)
UVCS6125	Fuse-7.2 kV/125 A/63 kA, 192 mm (SIBA)	UVCS3150	Fuse-3.6 kV/150 A/40 kA/M Type (LS)
UVCS6160	Fuse-7.2 kV/160 A/63 kA, 192 mm (SIBA)	UVCS3200	Fuse-3.6 kV/200 A/40 kA/M Type (LS)
UVCS6200	Fuse-7.2 kV/200 A/50 kA, 192 mm (SIBA)	UVCS3300	Fuse-3.6 kV/300 A/40 kA/M Type (LS)

※ 1) Order 2 units for one set.
2) Order 6 units for one set.
3) Order 3 units for one set.
Order 3 fuses for one set.

Attachments (UVC)

Order Code for Spare UVC Attachments

Code	Spec	Code	Spec
UVCS3400	Fuse-3.6 kV/400 A/40 kA/M Type (LS)	UVCS8030	Fuse-3.6 kV/30 A/40 kA/DIN Type (LS)
UVCS4005	Fuse-7.2 kV/5 A/40 kA/G Type (LS)	UVCS8040	Fuse-3.6 kV/40 A/40 kA/DIN Type (LS)
UVCS4010	Fuse-7.2 kV/10 A/40 kA/G Type (LS)	UVCS8050	Fuse-3.6 kV/50 A/40 kA/DIN Type (LS)
UVCS4020	Fuse-7.2 kV/20 A/40 kA/G Type (LS)	UVCS8063	Fuse-3.6 kV/63 A/40 kA/DIN Type (LS)
UVCS4030	Fuse-7.2 kV/30 A/40 kA/G Type (LS)	UVCS8075	Fuse-3.6 kV/75 A/40 kA/DIN Type (LS)
UVCS4040	Fuse-7.2 kV/40 A/40 kA/G Type (LS)	UVCS8100	Fuse-3.6 kV/100 A/40 kA/DIN Type (LS)
UVCS4050	Fuse-7.2 kV/50 A/40 kA/G Type (LS)	UVCS8125	Fuse-3.6 kV/125 A/40 kA/DIN Type (LS)
UVCS4060	Fuse-7.2 kV/60 A/40 kA/G Type (LS)	UVCS8160	Fuse-3.6 kV/160 A/40 kA/DIN Type (LS)
UVCS4075	Fuse-7.2 kV/75 A/40 kA/G Type (LS)	UVCS8200	Fuse-3.6 kV/200 A/40 kA/DIN Type (LS)
UVCS4100	Fuse-7.2 kV/100 A/40 kA/G Type (LS)	UVCS9005	Fuse-7.2 kV/5 A/40 kA/DIN Type (LS)
UVCS4150	Fuse-7.2 kV/150 A/40 kA/G Type (LS)	UVCS9010	Fuse-7.2 kV/10 A/40 kA/DIN Type (LS)
UVCS4200	Fuse-7.2 kV/200 A/40 kA/G Type (LS)	UVCS9020	Fuse-7.2 kV/20 A/40 kA/DIN Type (LS)
UVCS5020	Fuse-7.2 kV/20 A/40 kA/M Type (LS)	UVCS9030	Fuse-7.2 kV/30 A/40 kA/DIN Type (LS)
UVCS5050	Fuse-7.2 kV/50 A/40 kA/M Type (LS)	UVCS9040	Fuse-7.2 kV/40 A/40 kA/DIN Type (LS)
UVCS5100	Fuse-7.2 kV/100 A/40 kA/M Type (LS)	UVCS9050	Fuse-7.2 kV/50 A/40 kA/DIN Type (LS)
UVCS5150	Fuse-7.2 kV/150 A/40 kA/M Type (LS)	UVCS9063	Fuse-7.2 kV/63 A/40 kA/DIN Type (LS)
UVCS5200	Fuse-7.2 kV/200 A/40 kA/M Type (LS)	UVCS9075	Fuse-7.2 kV/75 A/40 kA/DIN Type (LS)
UVCS5300	Fuse-7.2 kV/300 A/40 kA/M Type (LS)	UVCS9100	Fuse-7.2 kV/100 A/40 kA/DIN Type (LS)
UVCS5400	Fuse-7.2 kV/400 A/40 kA/M Type (LS)	UVCS9125	Fuse-7.2 kV/125 A/40 kA/DIN Type (LS)
UVCS8005	Fuse-3.6 kV/5 A/40 kA/DIN Type (LS)	UVCS9160	Fuse-7.2 kV/160 A/40 kA/DIN Type (LS)
UVCS8010	Fuse-3.6 kV/10 A/40 kA/DIN Type (LS)	UVCS9200	Fuse-7.2 kV/200 A/40 kA/DIN Type (LS)
UVCS8020	Fuse-3.6 kV/20 A/40 kA/DIN Type (LS)	-	-

Dimensions

XA-Type Vacuum Circuit Breakers (7.2/12 kV) Fixed-Type, Phase-to-Phase Distance 150 mm

Unit : mm

HGV 1141C
HGV 1142C
HGV 2141C
HGV 2142C

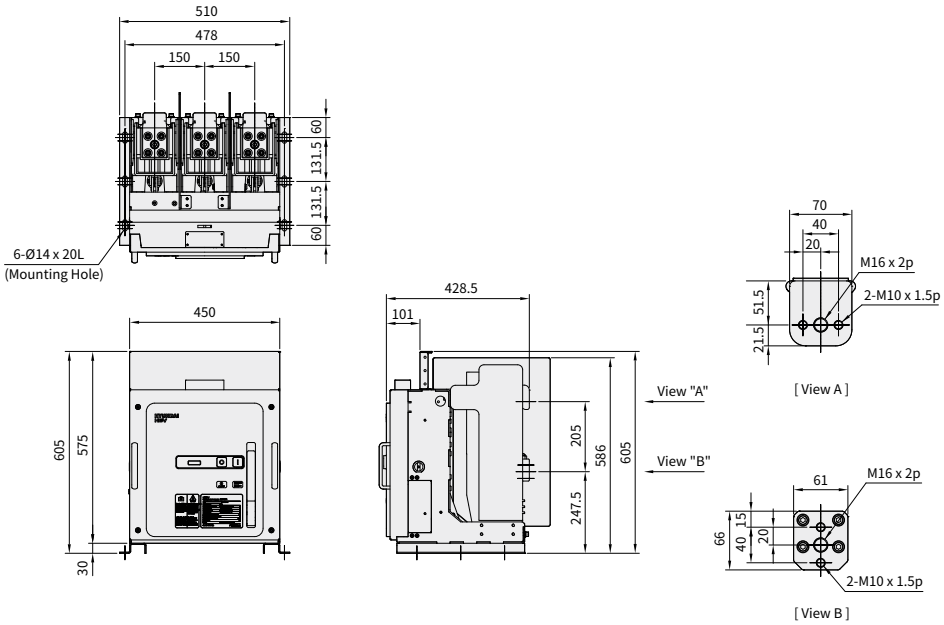

ES-Type Vacuum Circuit Breakers (7.2 kV) Draw-Out Type, Lever-Type, Phase-to-Phase Distance 150 mm

Unit : mm

HGV 1141C
HGV 1142

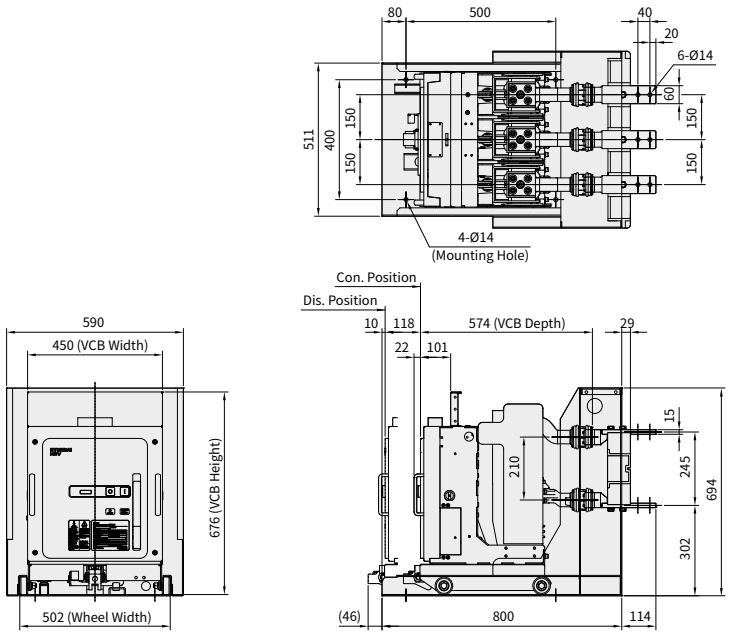

※ Dimension on this page are subject to change without notice.

Dimensions

FS-Type Vacuum Circuit Breakers (7.2 kV) Draw-Out Type, Lever-Type, Phase-to-Phase Distance 150 mm

Unit : mm

HGV 1141C
HGV 1142

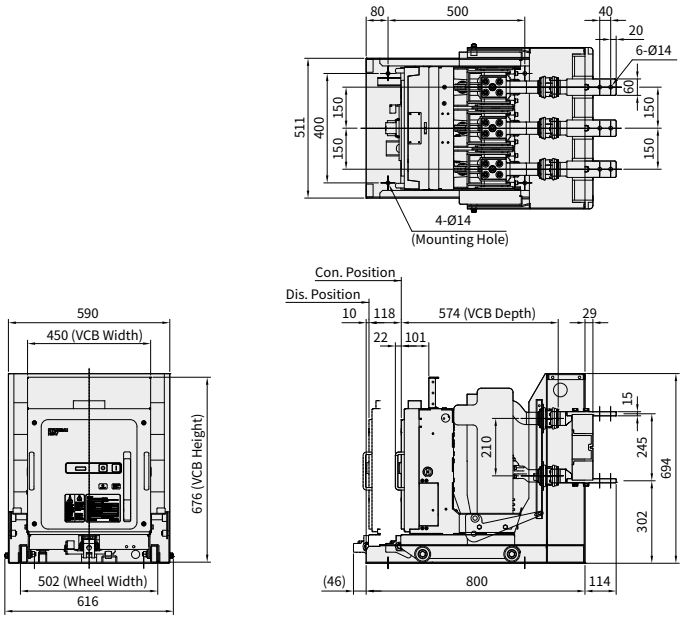

GS-Type Vacuum Circuit Breakers (7.2 kV) Draw-Out Type, Screw-Type, Phase-to-Phase Distance 150 mm

Unit : mm

HGV 1141C
HGV 1142

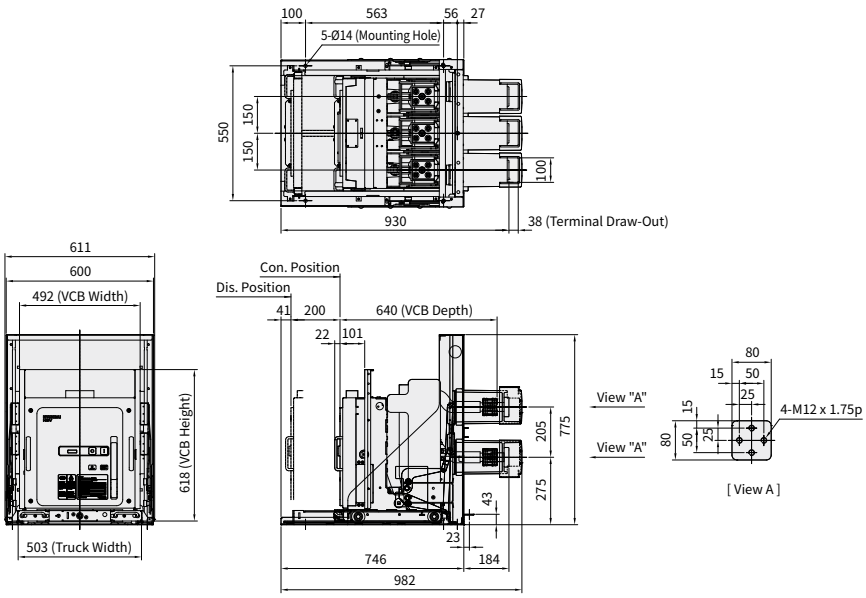

※ Dimension on this page are subject to change without notice.

GE-Type Vacuum Circuit Breakers (7.2 kV) Draw-Out Type, Screw-Type, Phase-to-Phase Distance 150 mm

HGV 1141C
HGV 1142

Unit : mm

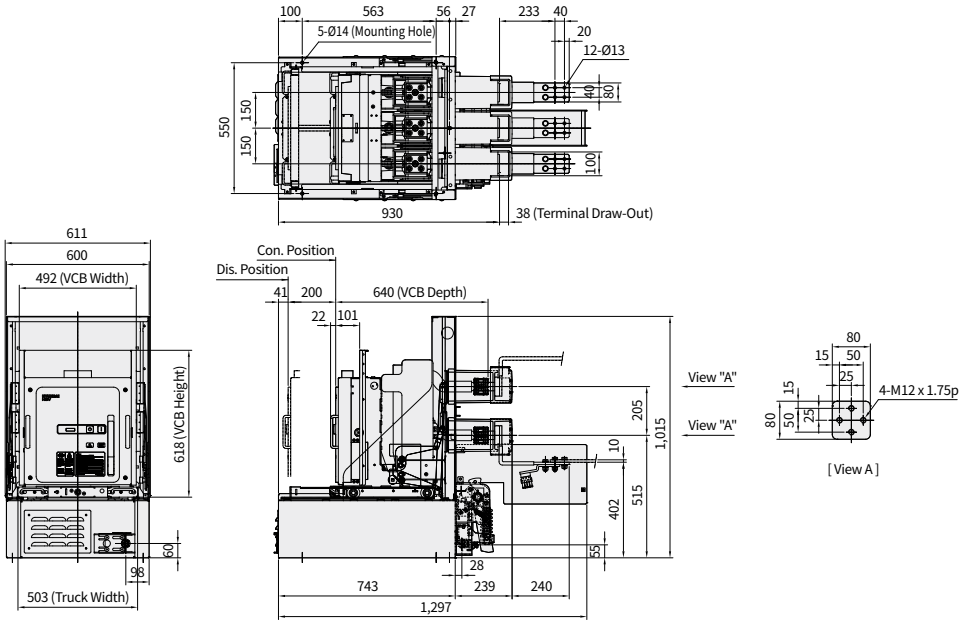

MS-Type Vacuum Circuit Breakers (7.2 kV) Draw-Out Type, Screw-Type, Phase-to-Phase Distance 150 mm

HGV 1141C
HGV 1142

Unit : mm

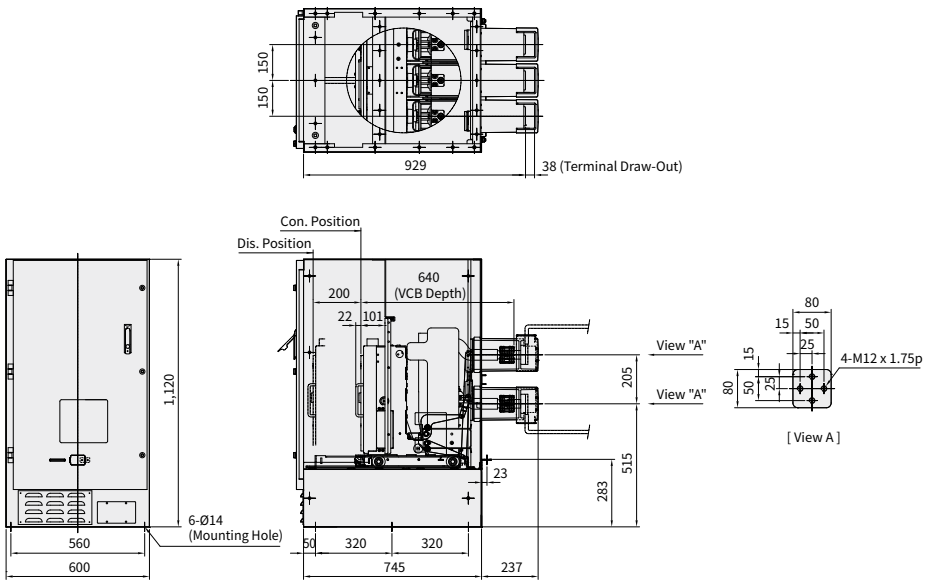

※ Dimension on this page are subject to change without notice.

Dimensions

ME-Type Vacuum Circuit Breakers (7.2 kV) Draw-Out Type, Screw-Type, Phase-to-Phase Distance 150 mm

HGV 1141C
HGV 1142

Unit : mm

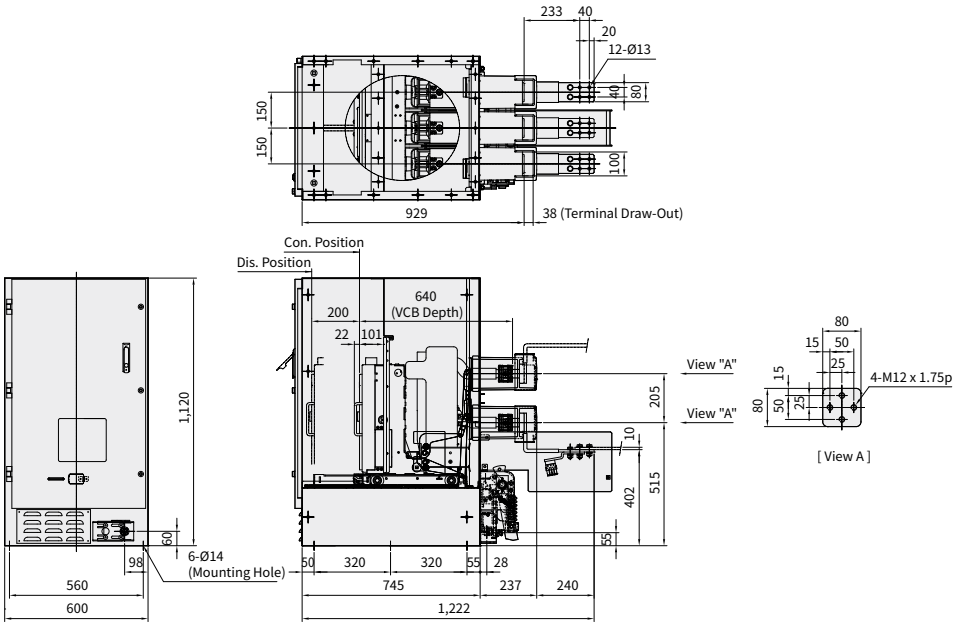

GS-Type Vacuum Circuit Breakers (7.2 kV) Draw-Out Type, Screw-Type, Phase-to-Phase Distance 210 mm

HGV 1141F
HGV 1142
HGV 1144

Unit : mm

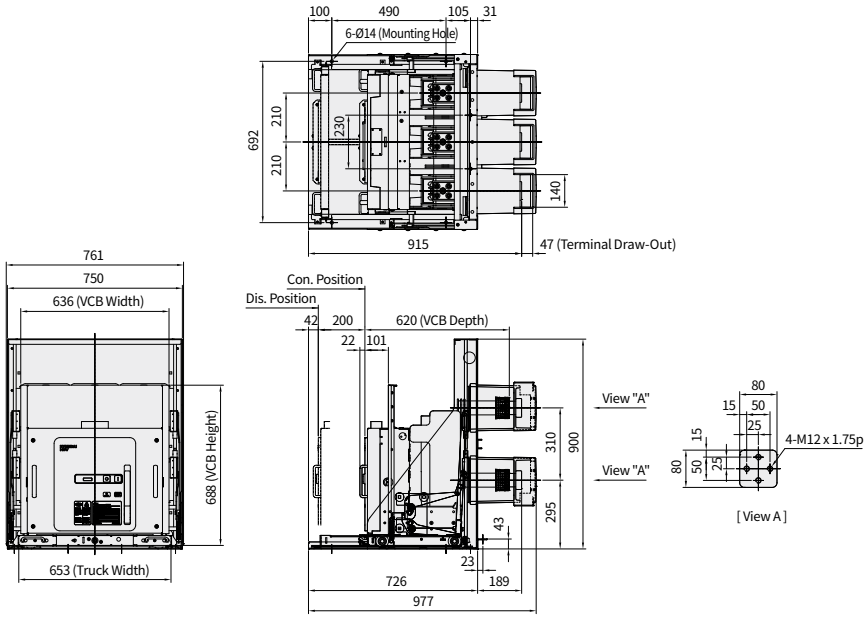

※ Dimension on this page are subject to change without notice.

GE-Type Vacuum Circuit Breakers (7.2 kV) Draw-Out Type, Screw-Type, Phase-to-Phase Distance 210 mm

HGV 1141F
HGV 1142
HGV 1144

Unit : mm

- 630/1,250 A : Terminal Busbar 1 ea
- 2,000 A : Terminal Busbar 2 ea

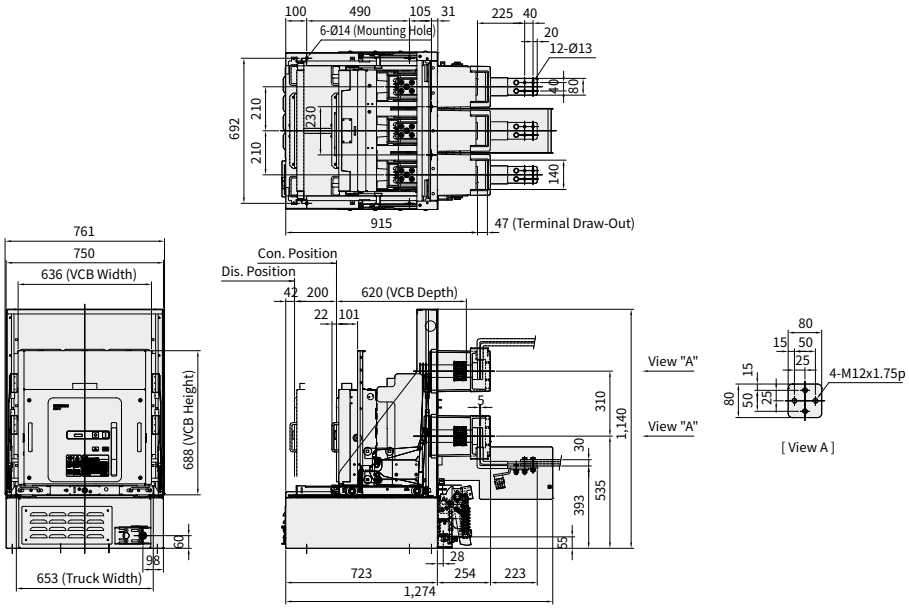

MS-Type Vacuum Circuit Breakers (7.2 kV) Draw-Out Type, Screw-Type, Phase-to-Phase Distance 210 mm

HGV 1141F
HGV 1142
HGV 1144

Unit : mm

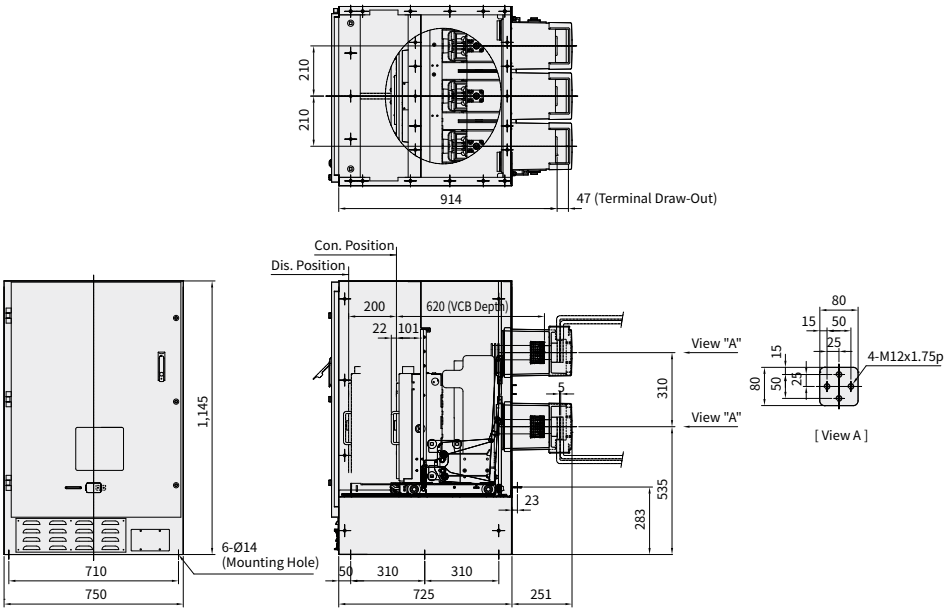

※ Dimension on this page are subject to change without notice.

Dimensions

ME-Type Vacuum Circuit Breakers (7.2 kV) Draw-Out Type, Screw-Type, Phase-to-Phase Distance 210 mm

HGV 1141F
HGV 1142
HGV 1144

Unit : mm

- 630/1,250 A : Terminal Busbar 1 ea
- 2,000 A : Terminal Busbar 2 ea

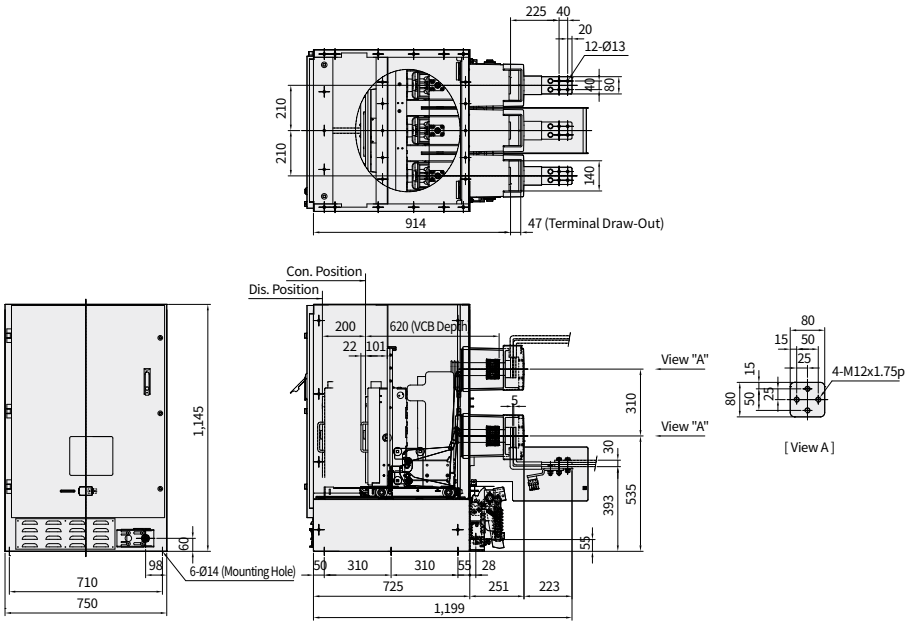

XA-Type Vacuum Circuit Breakers (7.2/12 kV) Fixed-Type, Phase-to-Phase Distance 210 mm

HGV 1144F
HGV 2144

Unit : mm

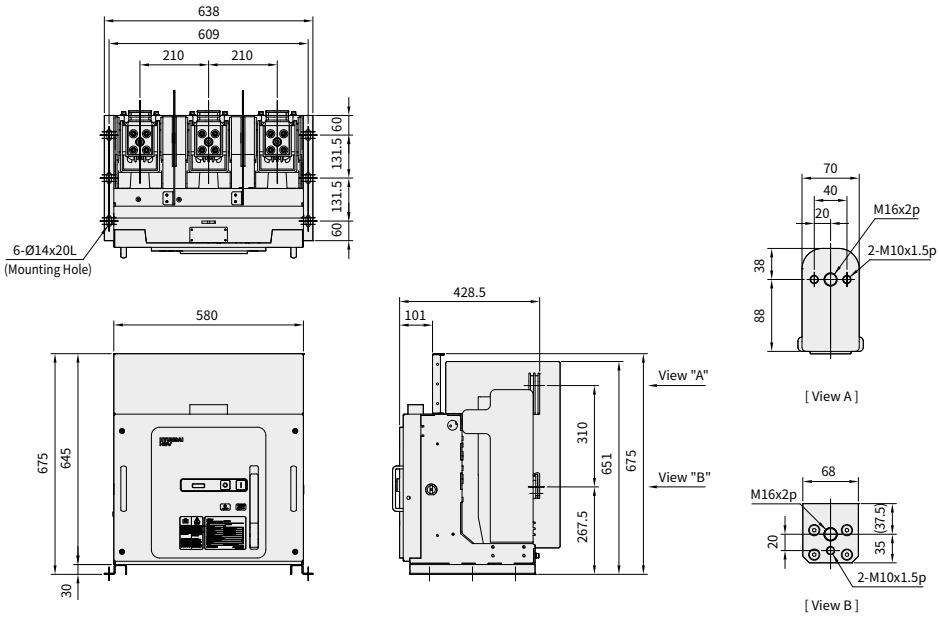

※ Dimension on this page are subject to change without notice.

XA-Type Vacuum Circuit Breakers (7.2/12 kV) Fixed-Type, Phase-to-Phase Distance 210 mm

HGV 1152F
HGV 1162
HGV 2152
HGV 2162

Unit : mm

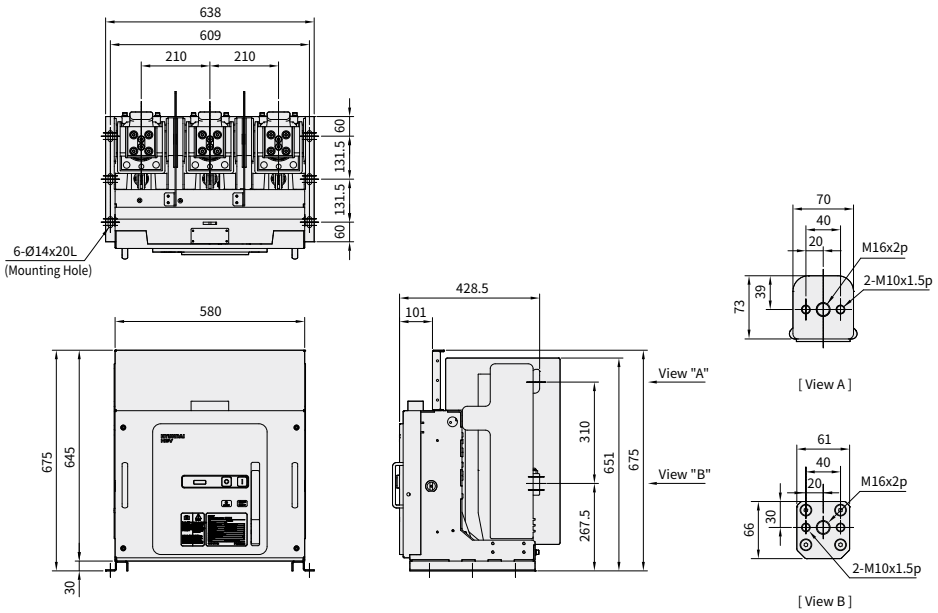

GS-Type Vacuum Circuit Breakers (7.2 kV) Draw-Out Type, Screw-Type, Phase-to-Phase Distance 210 mm

HGV 1152F
HGV 1154
HGV 1162
HGV 1164
HGV 1172
HGV 1174

Unit : mm

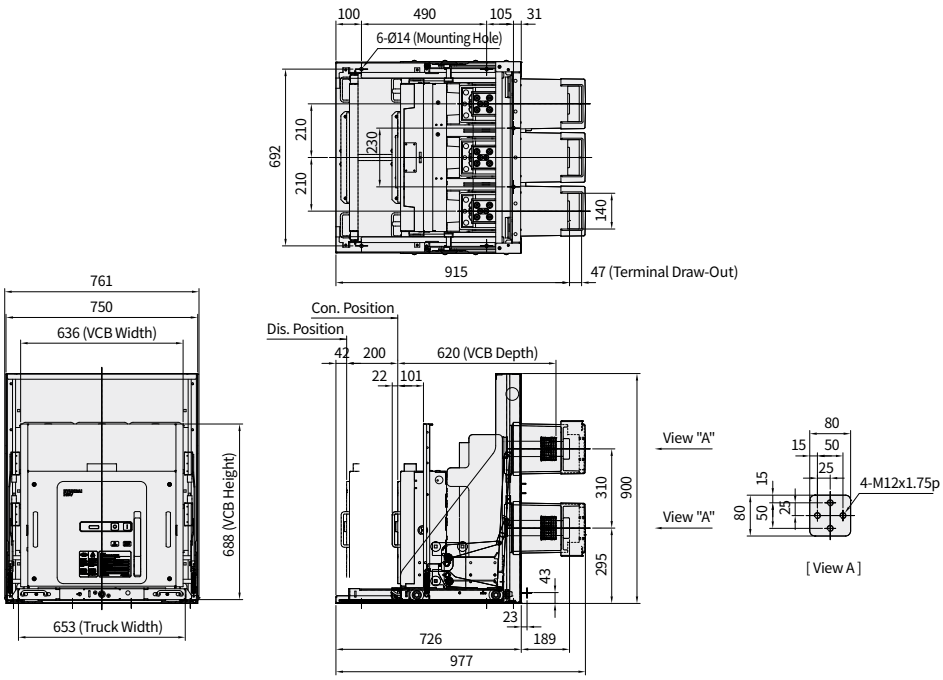

※ Dimension on this page are subject to change without notice.

Dimensions

GE-Type Vacuum Circuit Breakers (7.2 kV) Draw-Out Type, Screw-Type, Phase-to-Phase Distance 210 mm

HGV 1152F
HGV 1154
HGV 1162
HGV 1164
HGV 1172
HGV 1174

Unit : mm

- 1,250 A : Terminal Busbar 1 ea
- 2,000 A : Terminal Busbar 2 ea

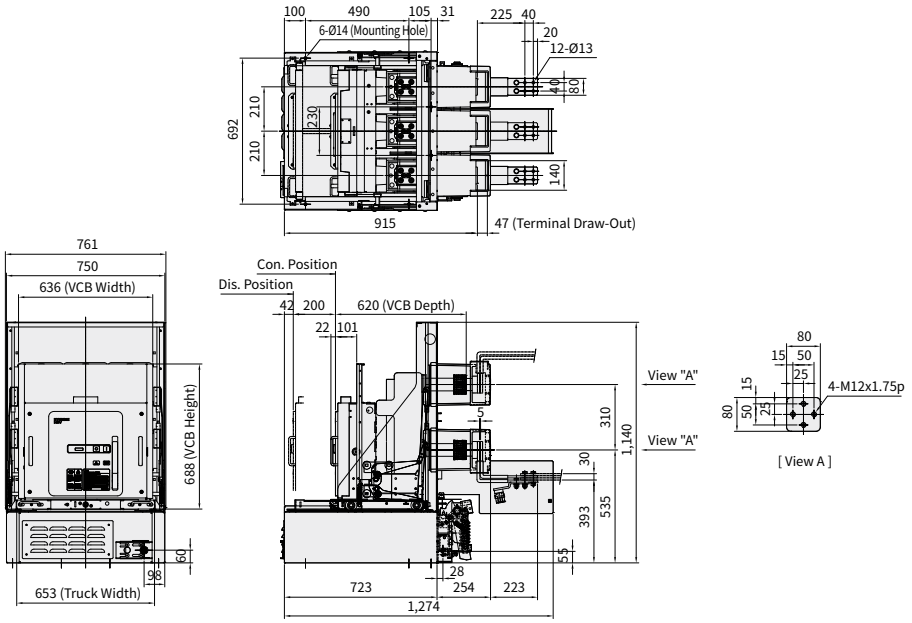

MS-Type Vacuum Circuit Breakers (7.2 kV) Draw-Out Type, Screw-Type, Phase-to-Phase Distance 210 mm

HGV 1152F
HGV 1154
HGV 1162
HGV 1164
HGV 1172
HGV 1174

Unit : mm

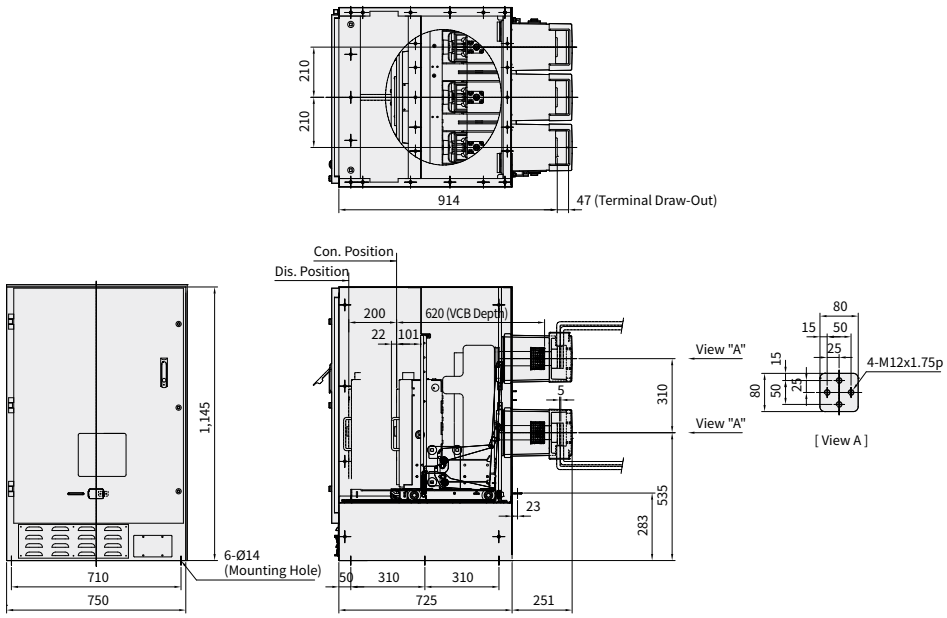

※ Dimension on this page are subject to change without notice.

ME-Type Vacuum Circuit Breakers (7.2 kV) Draw-Out Type, Screw-Type, Phase-to-Phase Distance 210 mm

HGV 1152F
HGV 1154
HGV 1162
HGV 1164
HGV 1172
HGV 1174

Unit : mm

- 1,250 A : Terminal Busbar 1 ea
- 2,000 A : Terminal Busbar 2 ea

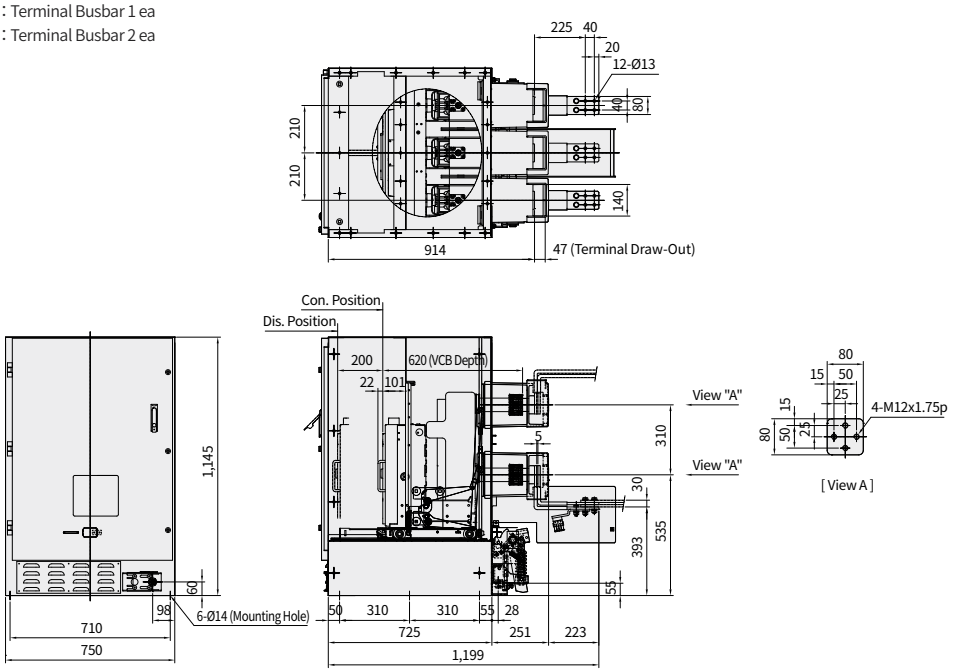

XA-Type Vacuum Circuit Breakers (7.2/12 kV) Fixed-Type, Phase-to-Phase Distance 210 mm

HGV 1154F
HGV 1164
HGV 1172
HGV 1174
HGV 2154
HGV 2164
HGV 2172
HGV 2174

Unit : mm

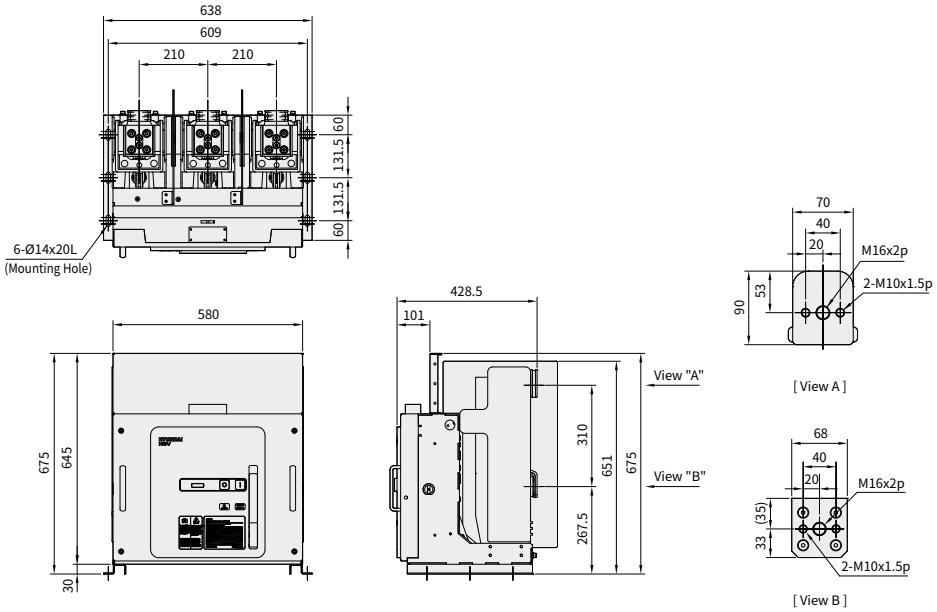

※ Dimension on this page are subject to change without notice.

Dimensions

ES-Type Vacuum Circuit Breakers (12 kV) Draw-Out Type, Lever-Type, Phase-to-Phase Distance 150 mm

Unit : mm

HGV 2141C
HGV 2142

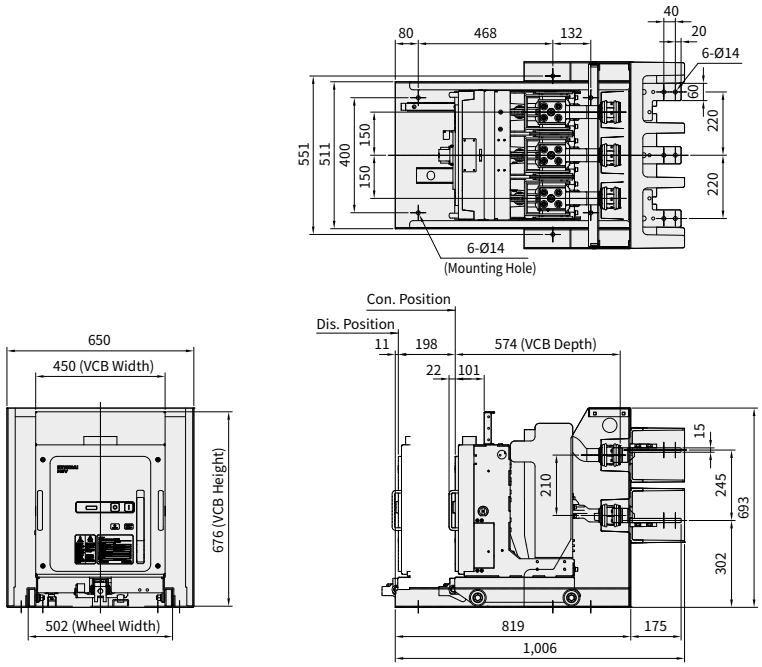

FS-Type Vacuum Circuit Breakers (12 kV) Draw-Out Type, Lever-Type, Phase-to-Phase Distance 150 mm

Unit : mm

HGV 2141C
HGV 2142

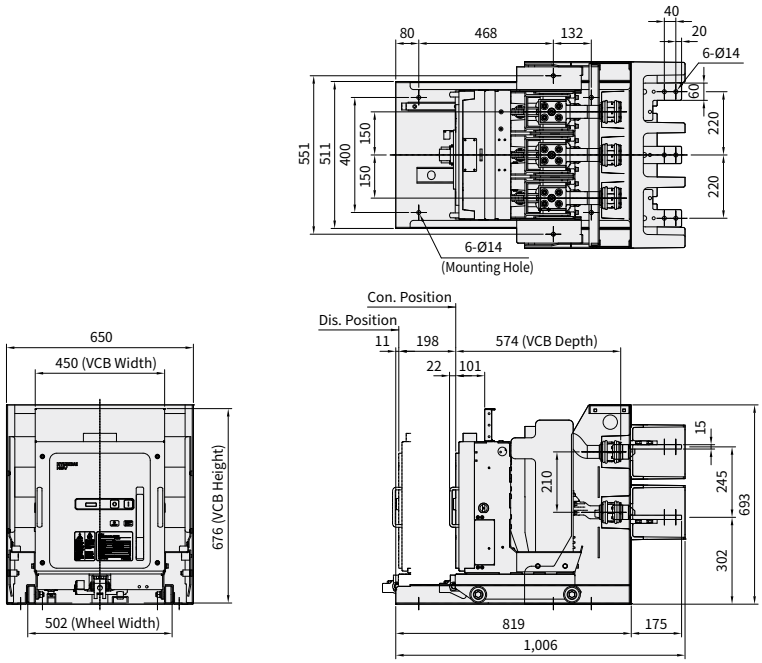

※ Dimension on this page are subject to change without notice.

XA-Type Vacuum Circuit Breakers (17.5 kV) Fixed-Type, Phase-to-Phase Distance 150 mm

Unit : mm

HGV 3141C
HGV 3142

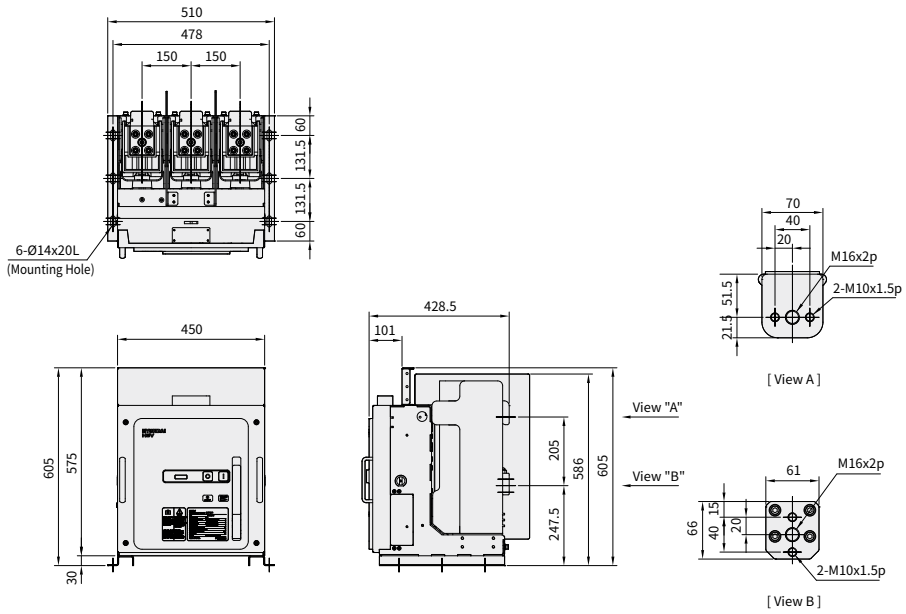

ES-Type Vacuum Circuit Breakers (17.5 kV) Draw-Out Type, Lever-Type, Phase-to-Phase Distance 150 mm

Unit : mm

HGV 3141C
HGV 3142

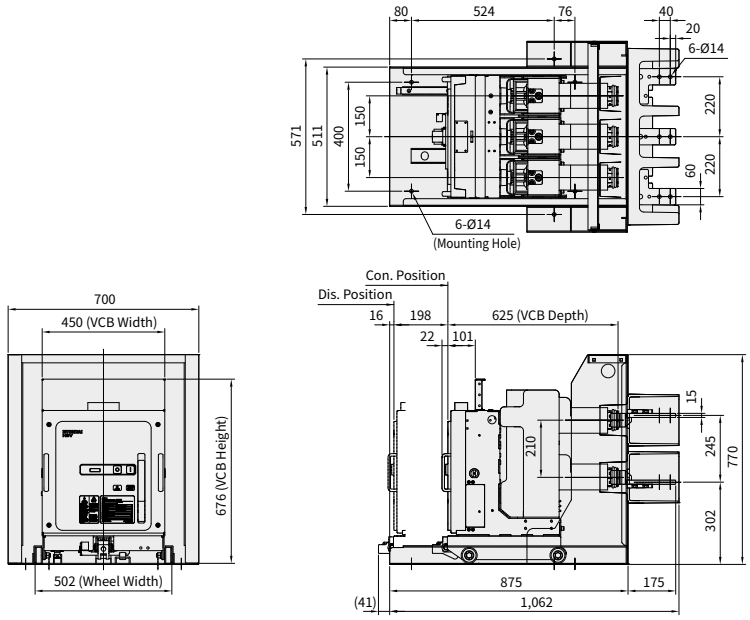

※ Dimension on this page are subject to change without notice.

Dimensions

FS-Type Vacuum Circuit Breakers (17.5 kV) Draw-Out Type, Lever-Type, Phase-to-Phase Distance 150 mm

Unit : mm

HGV 3141C
HGV 3142

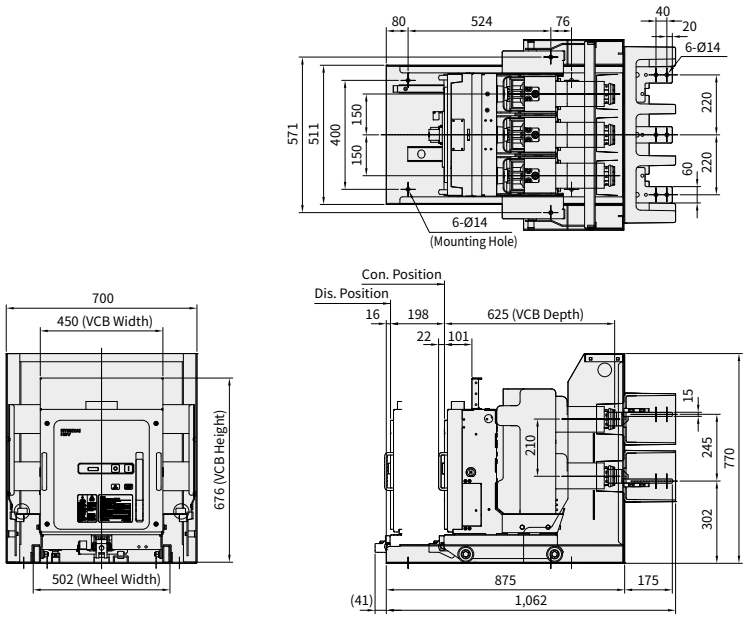

GS-Type Vacuum Circuit Breakers (12/17.5 kV) Draw-Out Type, Screw-Type, Phase-to-Phase Distance 150 mm

Unit : mm

HGV 2141C
HGV 2142
HGV 3141
HGV 3142

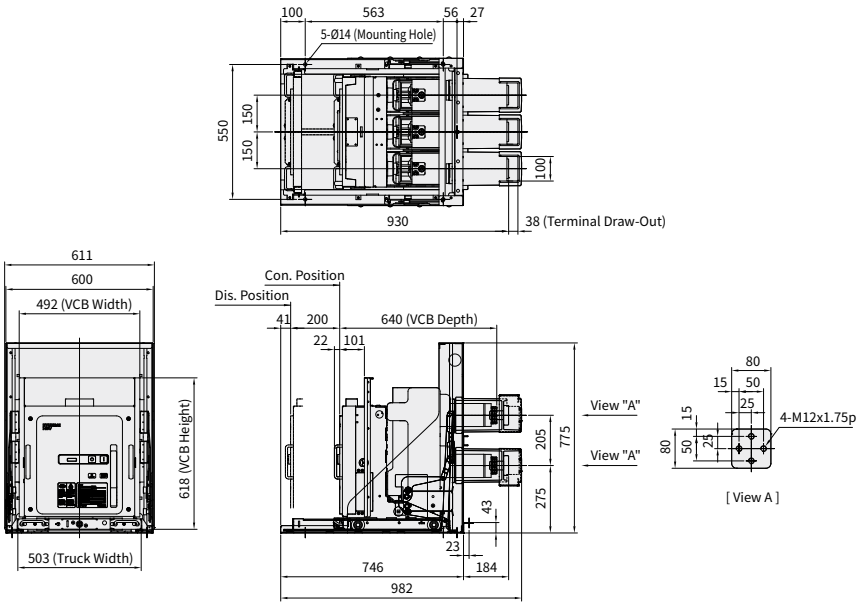

※ Dimension on this page are subject to change without notice.

GE-Type Vacuum Circuit Breakers (12/17.5 kV) Draw-Out Type, Screw-Type, Phase-to-Phase Distance 150 mm

HGV 2141C
HGV 2142
HGV 3141
HGV 3142

Unit : mm

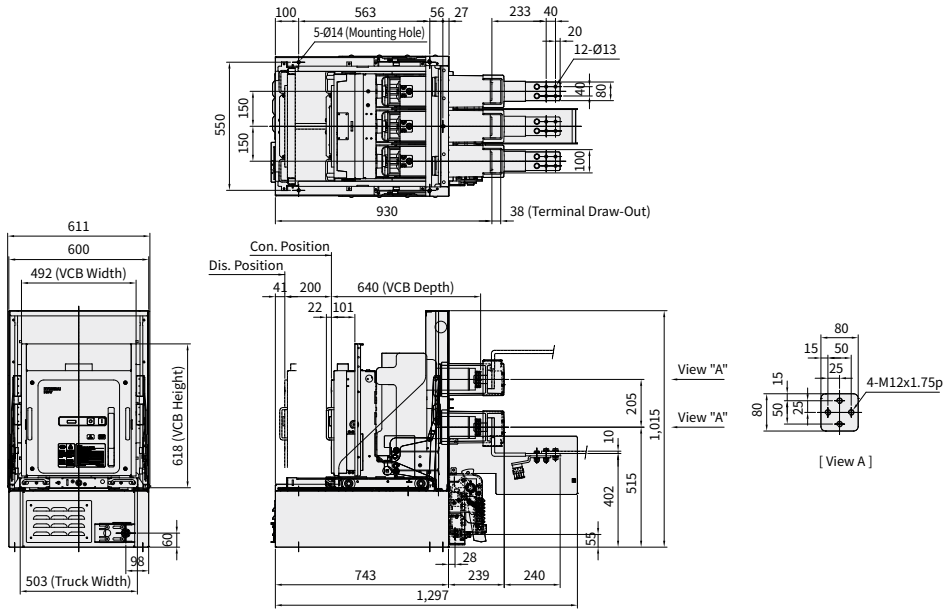

MS-Type Vacuum Circuit Breakers (12/17.5 kV) Draw-Out Type, Screw-Type, Phase-to-Phase Distance 150 mm

HGV 2141C
HGV 2142
HGV 3141
HGV 3142

Unit : mm

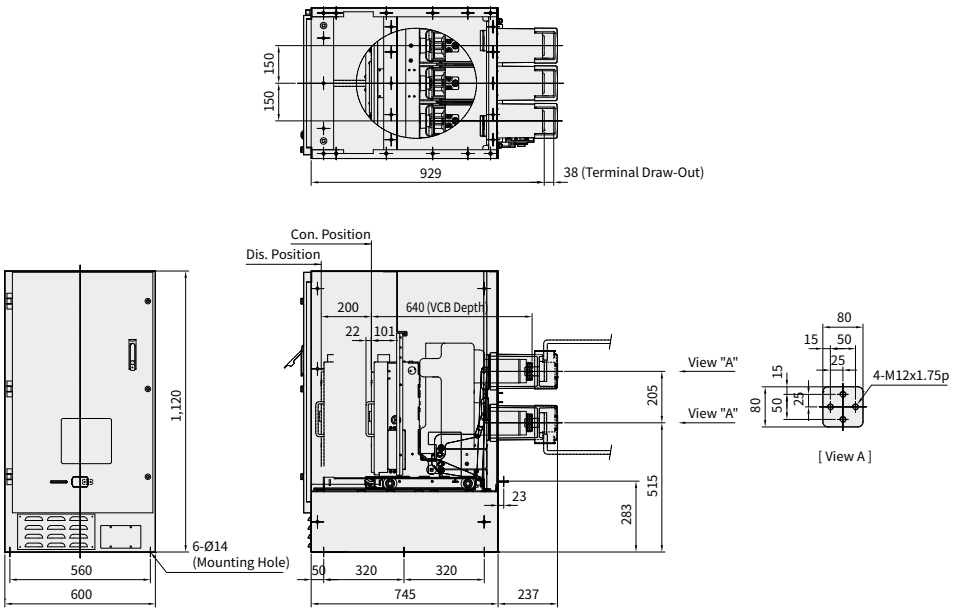

※ Dimension on this page are subject to change without notice.

Dimensions

ME-Type Vacuum Circuit Breakers (12/17.5 kV) Draw-Out Type, Screw-Type, Phase-to-Phase Distance 150 mm

HGV 2141C
HGV 2142
HGV 3141
HGV 3142

Unit : mm

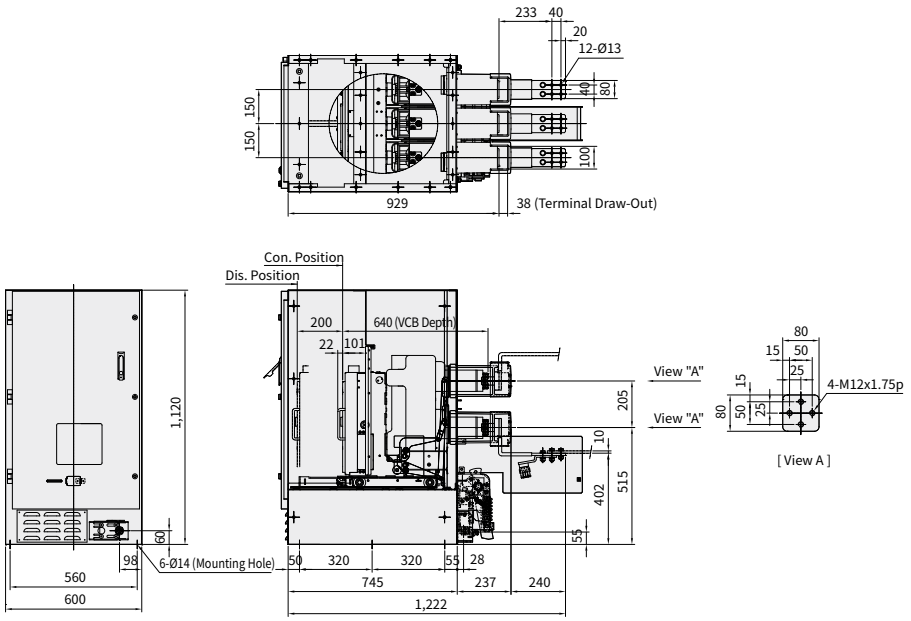

GS-Type Vacuum Circuit Breakers (12/17.5 kV) Draw-Out Type, Screw-Type, Phase-to-Phase Distance 210 mm

HGV 2141F
HGV 2142
HGV 2144
HGV 3141
HGV 3142
HGV 3144

Unit : mm

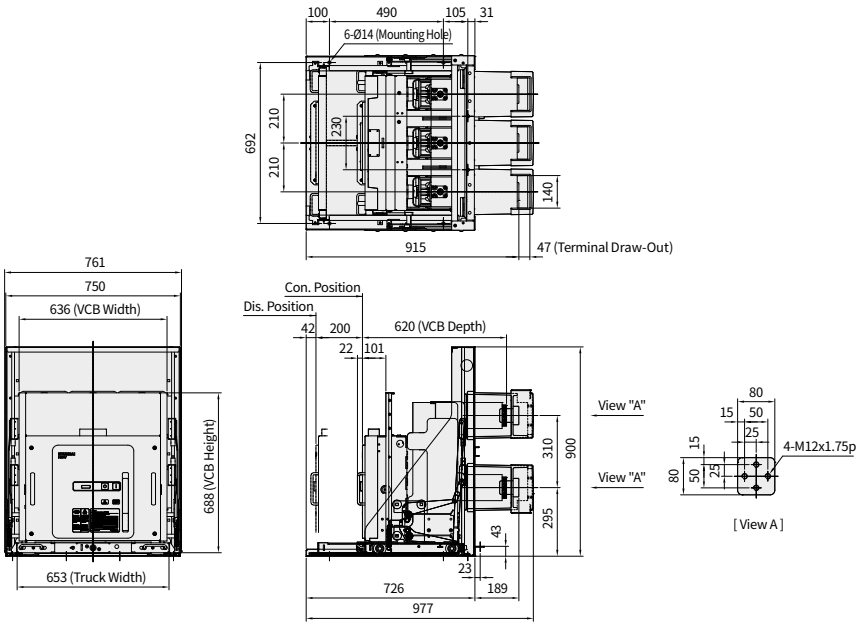

※ Dimension on this page are subject to change without notice.

GE-Type Vacuum Circuit Breakers (12/17.5 kV) Draw-Out Type, Screw-Type, Phase-to-Phase Distance 210 mm

HGV 2141F
HGV 2142
HGV 2144
HGV 3141
HGV 3142
HGV 3144

Unit : mm

- 630/1,250 A : Terminal Busbar 1 ea
- 2,000 A : Terminal Busbar 2 ea

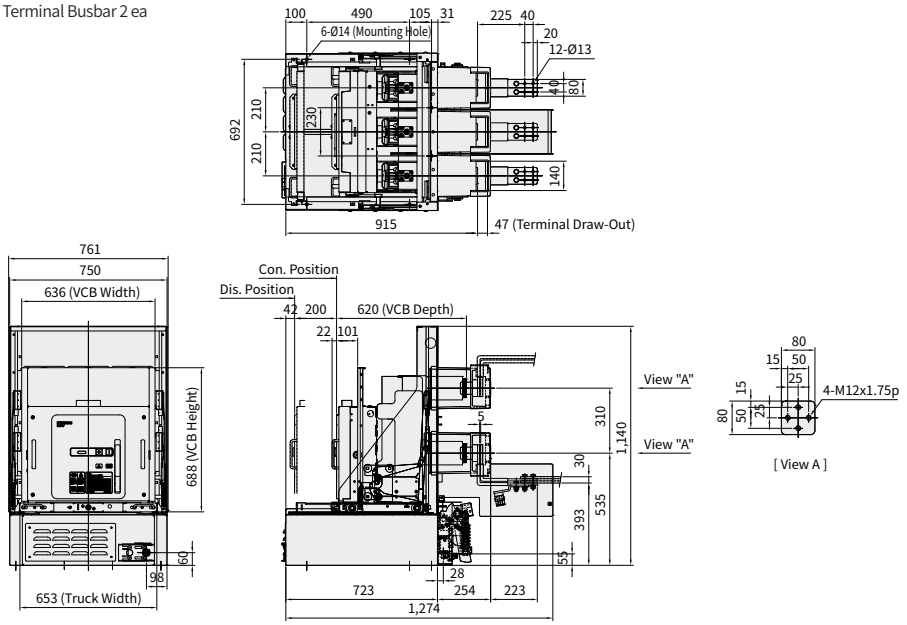

MS-Type Vacuum Circuit Breakers (12/17.5 kV) Draw-Out Type, Screw-Type, Phase-to-Phase Distance 210 mm

HGV 2141F
HGV 2142
HGV 2144
HGV 3141
HGV 3142
HGV 3144

Unit : mm

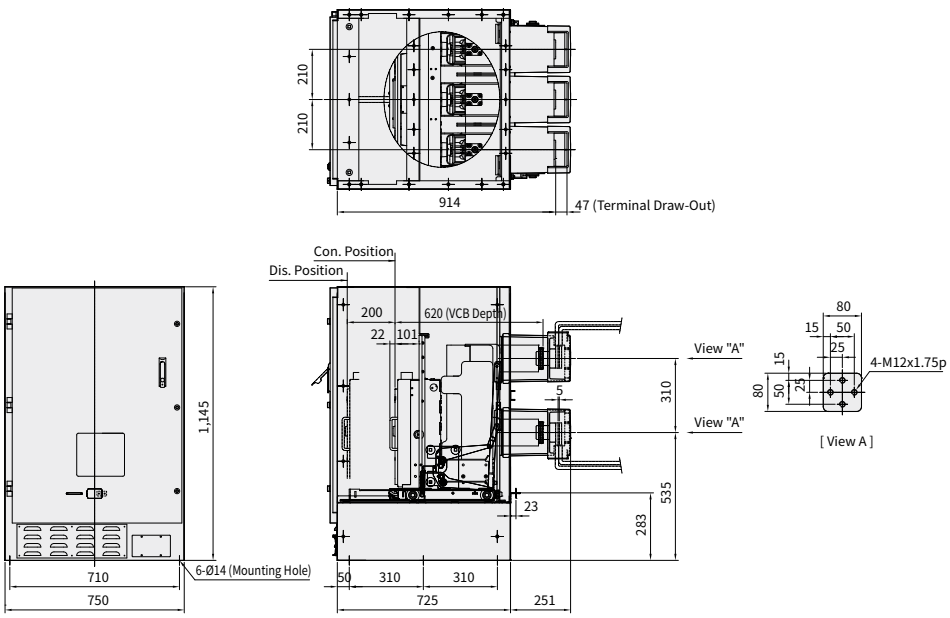

※ Dimension on this page are subject to change without notice.

Dimensions

ME-Type Vacuum Circuit Breakers (12/17.5 kV) Draw-Out Type, Screw-Type, Phase-to-Phase Distance 210 mm

HGV 2141F
HGV 2142
HGV 2144
HGV 3141
HGV 3142
HGV 3144

Unit : mm

- 630/1,250 A : Terminal Busbar 1 ea
- 2,000 A : Terminal Busbar 2 ea

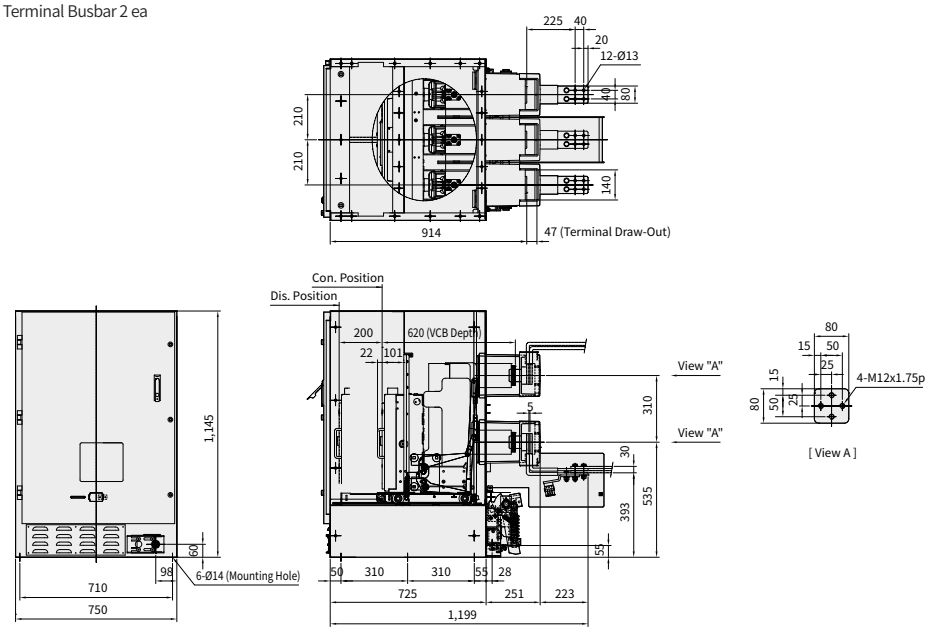

XA-Type Vacuum Circuit Breakers (17.5 kV) Fixed-Type, Phase-to-Phase Distance 210 mm

HGV 3144F

Unit : mm

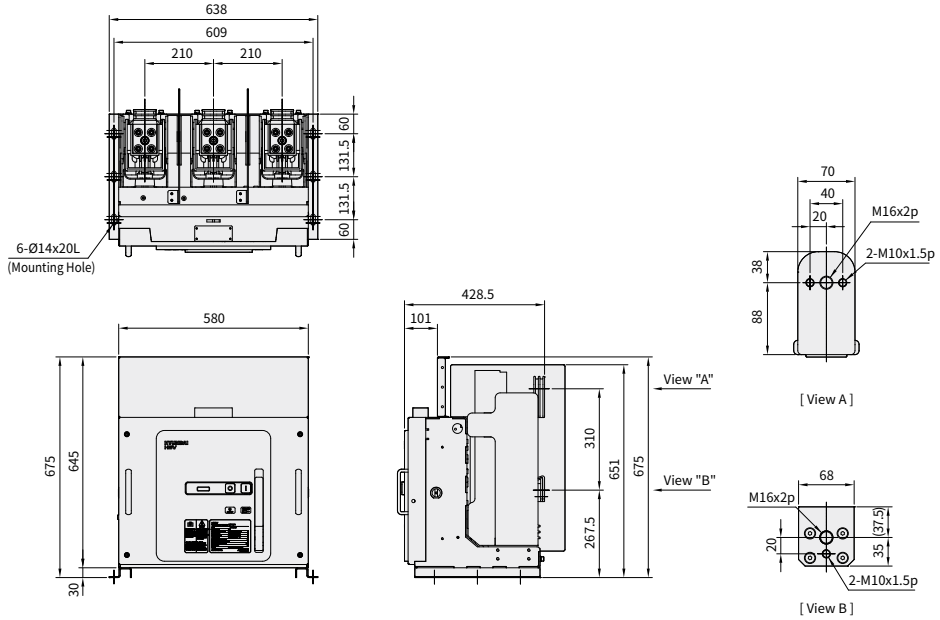

※ Dimension on this page are subject to change without notice.

XA-Type Vacuum Circuit Breakers (17.5 kV) Fixed-Type, Phase-to-Phase Distance 210 mm

Unit : mm

HGV 3152F
HGV 3162

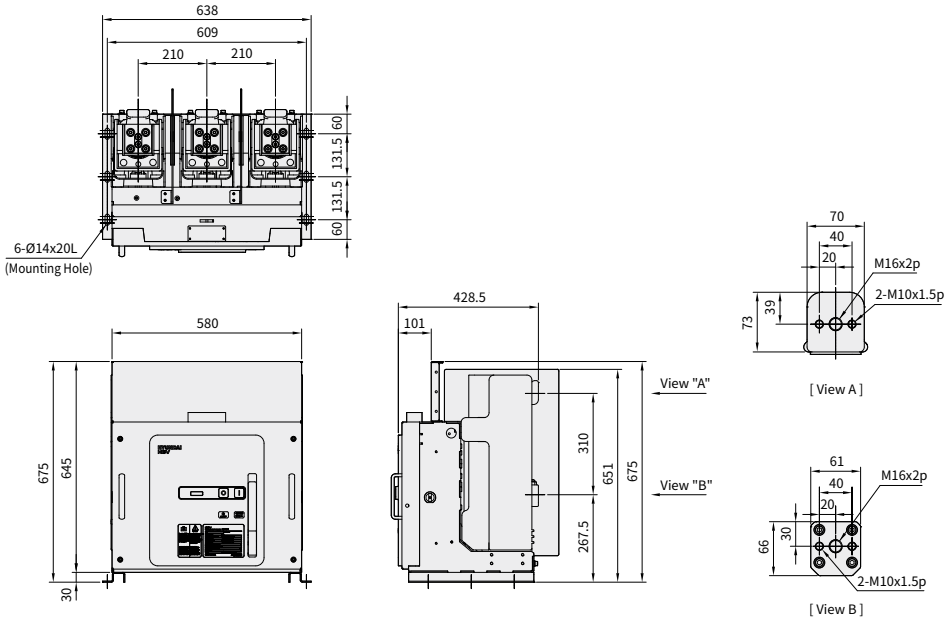

GS-Type Vacuum Circuit Breakers (12/17.5 kV) Draw-Out Type, Screw-Type, Phase-to-Phase Distance 210 mm

Unit : mm

HGV 2152F
HGV 2154
HGV 2162
HGV 2164
HGV 2172
HGV 2174
HGV 3152
HGV 3154
HGV 3162
HGV 3164
HGV 3172
HGV 3174

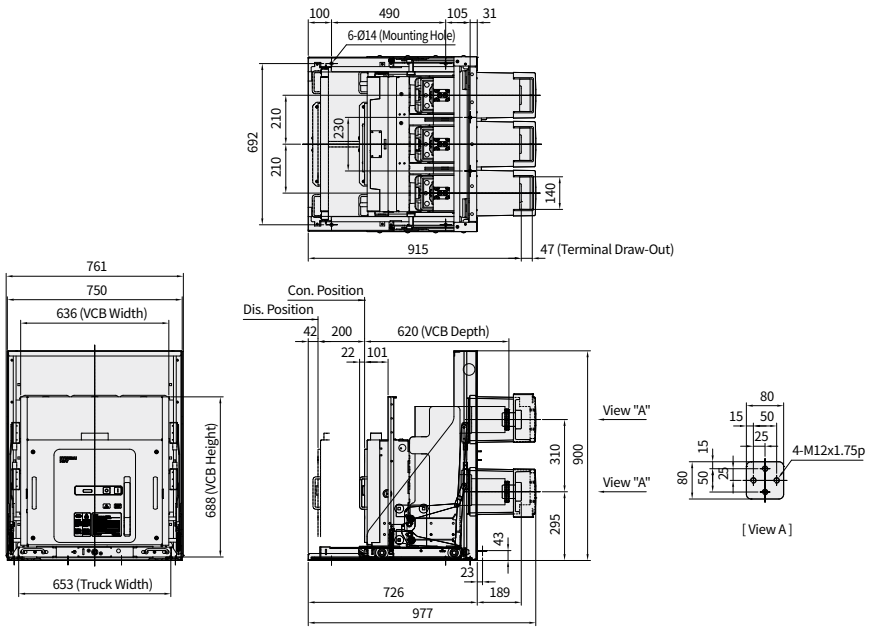

※ Dimension on this page are subject to change without notice.

Dimensions

GE-Type Vacuum Circuit Breakers (12/17.5 kV) Draw-Out Type, Screw-Type, Phase-to-Phase Distance 210 mm

HGV 2152F
HGV 2154
HGV 2162
HGV 2164
HGV 2172
HGV 2174
HGV 3152
HGV 3154
HGV 3162
HGV 3164
HGV 3172
HGV 3174

Unit : mm

- 1,250 A : Terminal Busbar 1 ea
- 2,000 A : Terminal Busbar 2 ea

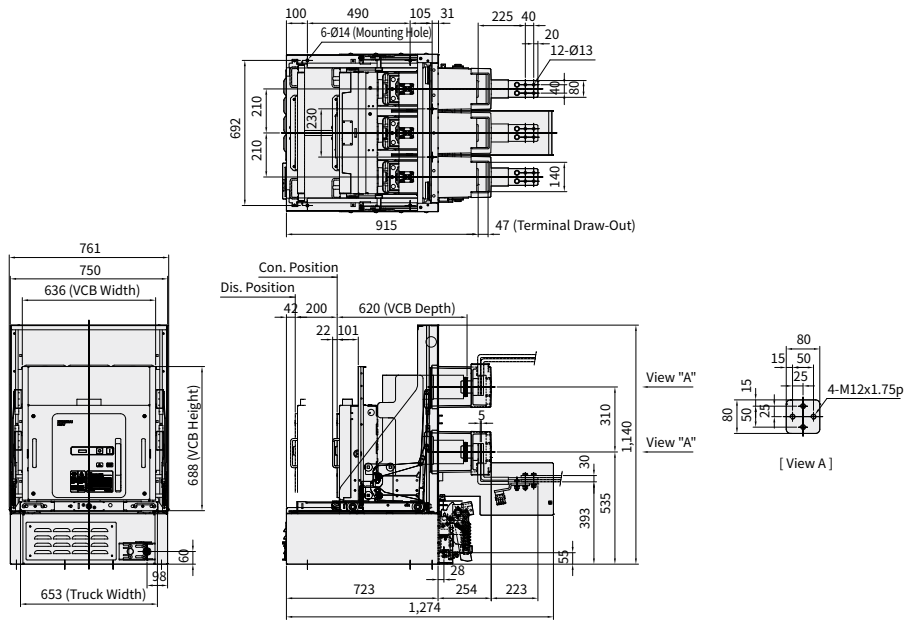

MS-Type Vacuum Circuit Breakers (12/17.5 kV) Draw-Out Type, Screw-Type, Phase-to-Phase Distance 210 mm

HGV 2152F
HGV 2154
HGV 2162
HGV 2164
HGV 2172
HGV 2174
HGV 3152
HGV 3154
HGV 3162
HGV 3164
HGV 3172
HGV 3174

Unit : mm

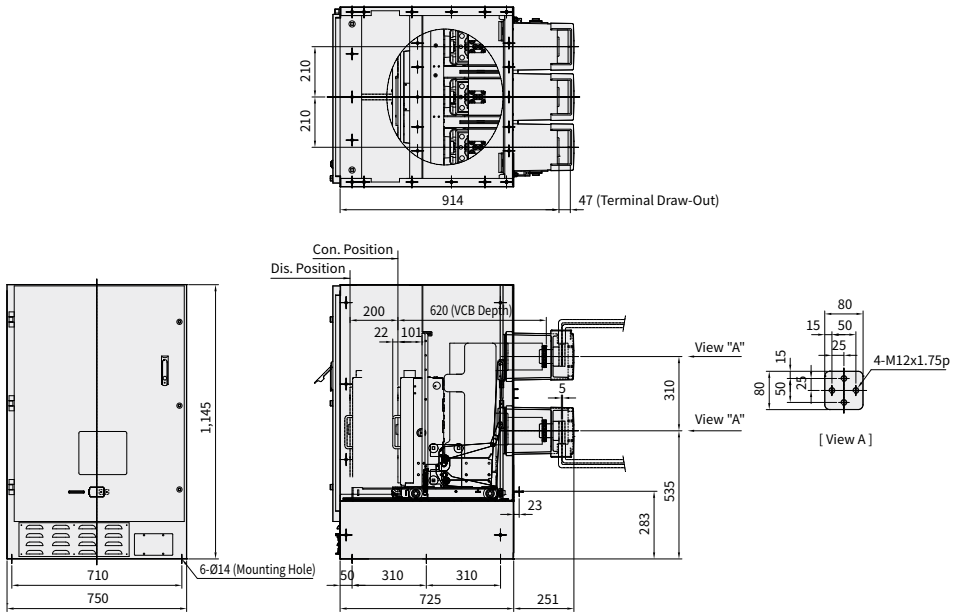

※ Dimension on this page are subject to change without notice.

ME-Type Vacuum Circuit Breakers (12/17.5 kV) Draw-Out Type, Screw-Type, Phase-to-Phase Distance 210 mm

HGV 2152F
HGV 2154
HGV 2162
HGV 2164
HGV 2172
HGV 2174
HGV 3152
HGV 3154
HGV 3162
HGV 3164
HGV 3172
HGV 3174

- 1,250 A : Terminal Busbar 1 ea
- 2,000 A : Terminal Busbar 2 ea

Unit : mm

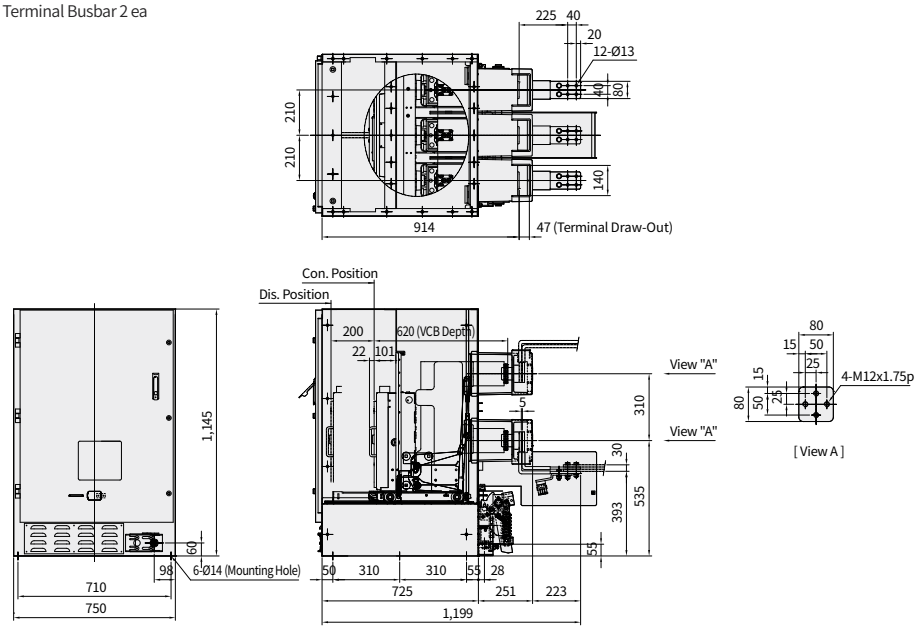

XA-Type Vacuum Circuit Breakers (17.5 kV) Fixed-Type, Phase-to-Phase Distance 210 mm

HGV 3154F
HGV 3164
HGV 3172
HGV 3174

Unit : mm

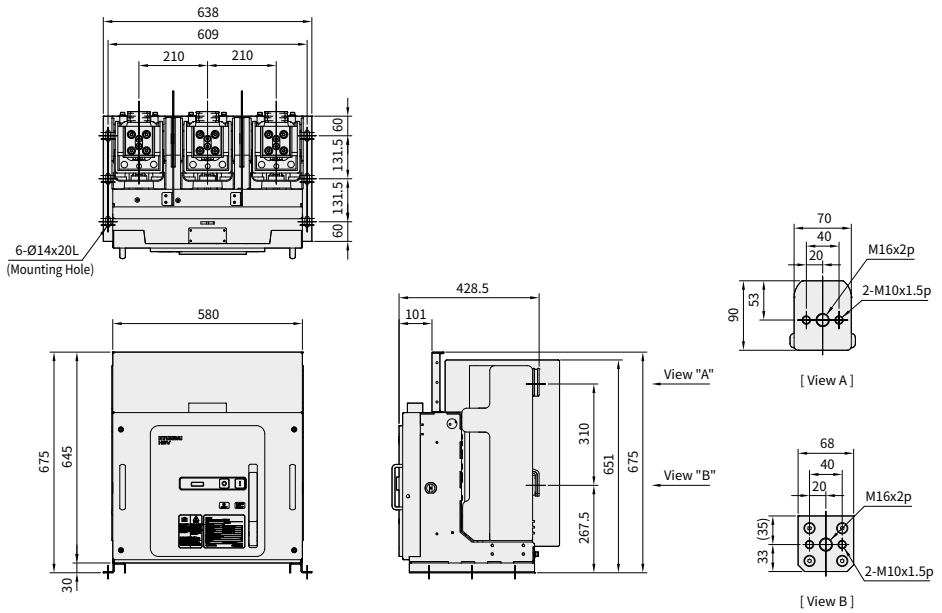

※ Dimension on this page are subject to change without notice.

Dimensions

XA-Type Vacuum Circuit Breakers (24/25.8 kV) Fixed-Type, Phase-to-Phase Distance 210 mm

Unit : mm

HGV 6111F
HGV 6112
HGV 6141
HGV 6142

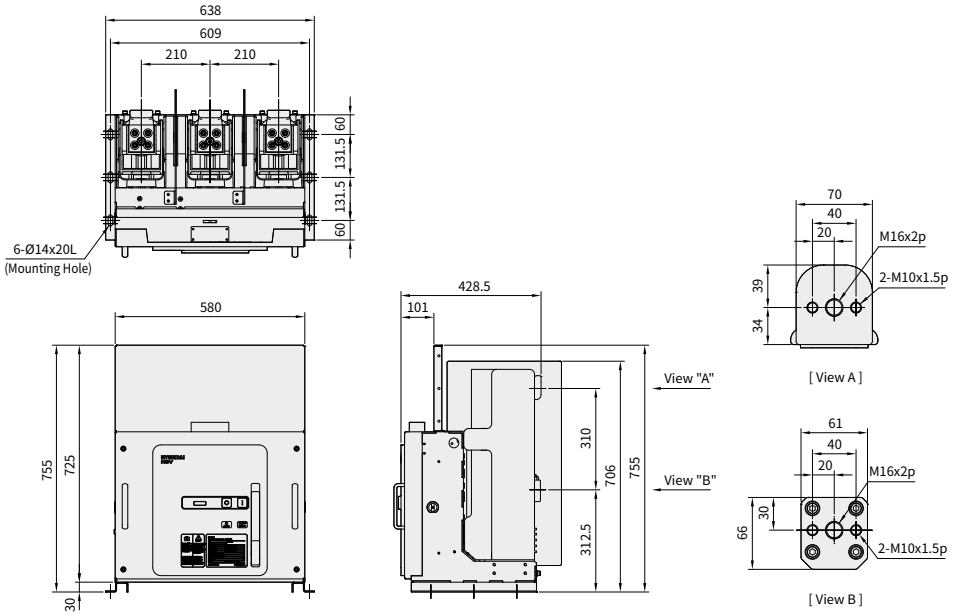

ES/E3-Type Vacuum Circuit Breakers (24/25.8 kV) Draw-Out Type, Lever-Type, Phase-to-Phase Distance 210 mm

Unit : mm

HGV 6111F
HGV 6112
HGV 6141
HGV 6142

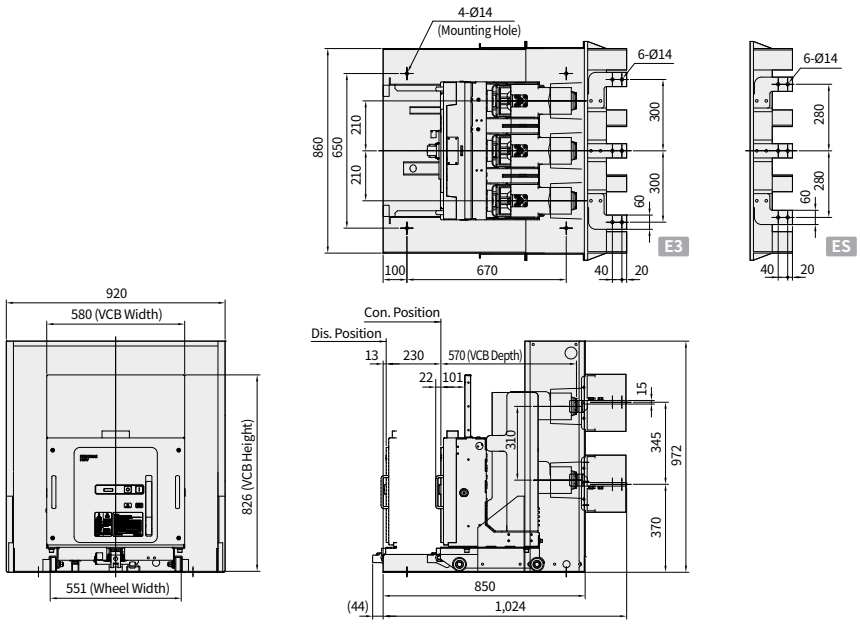

※ Dimension on this page are subject to change without notice.

FS/F3-Type Vacuum Circuit Breakers (24/25.8 kV) Draw-Out Type, Lever-Type, Phase-to-Phase Distance 210 mm

HGV 6111F
HGV 6112
HGV 6141
HGV 6142

Unit : mm

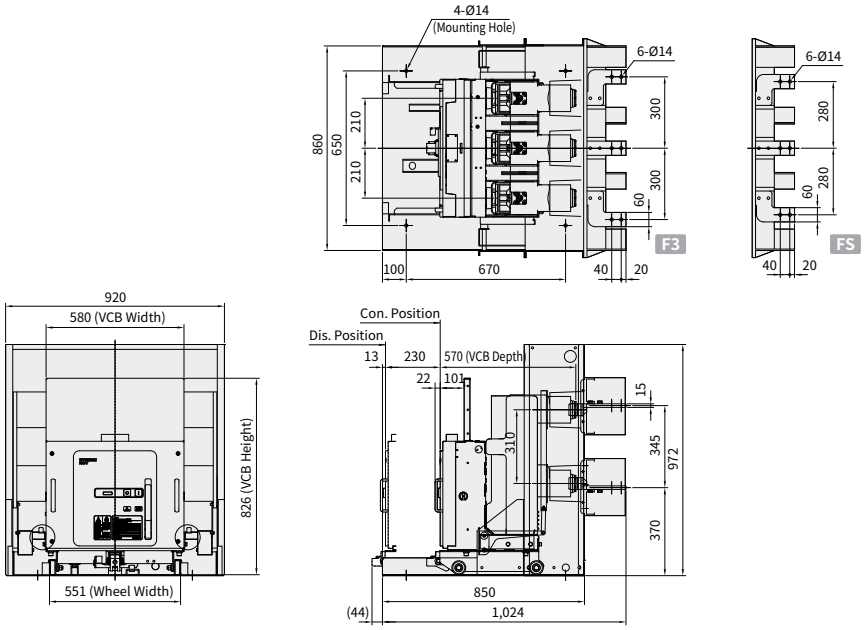

GS-Type Vacuum Circuit Breakers (24/25.8 kV) Draw-Out Type, Screw-Type, Phase-to-Phase Distance 210 mm

HGV 6111F
HGV 6112
HGV 6114
HGV 6141
HGV 6142
HGV 6144

Unit : mm

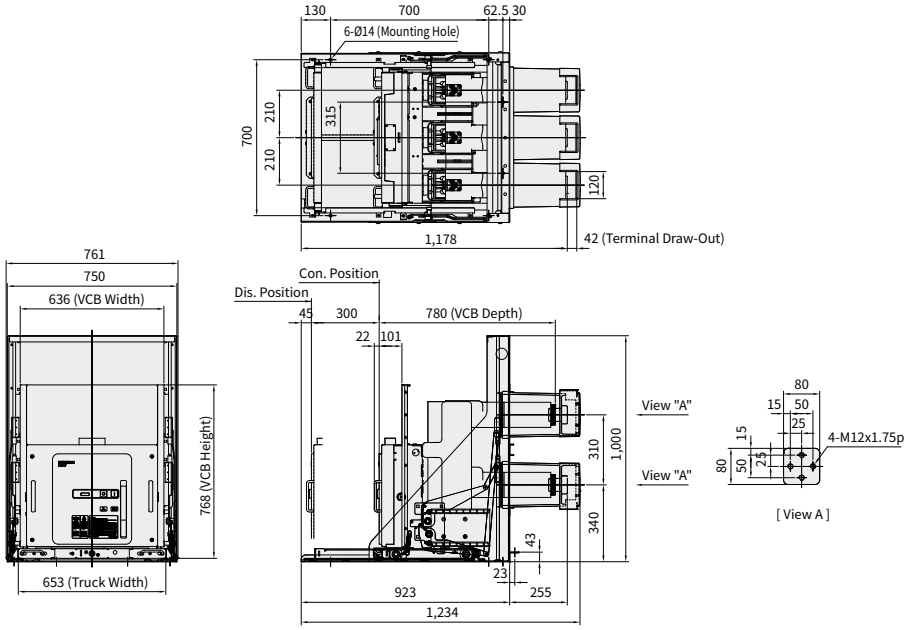

※ Dimension on this page are subject to change without notice.

Dimensions

GE-Type Vacuum Circuit Breakers (24/25.8 kV) Draw-Out Type, Screw-Type, Phase-to-Phase Distance 210 mm

HGV 6111F
HGV 6112
HGV 6114
HGV 6141
HGV 6142
HGV 6144

Unit : mm

- 630/1,250 A : Terminal Busbar 1 ea
- 2,000 A : Terminal Busbar 2 ea

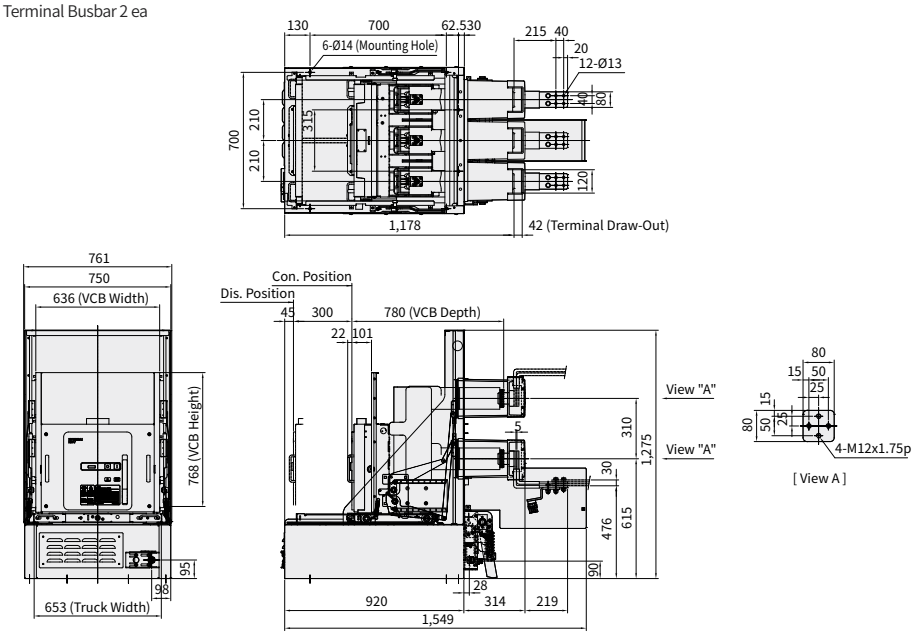

MS-Type Vacuum Circuit Breakers (24/25.8 kV) Draw-Out Type, Screw-Type, Phase-to-Phase Distance 210 mm

HGV 6111F
HGV 6112
HGV 6114
HGV 6141
HGV 6142
HGV 6144

Unit : mm

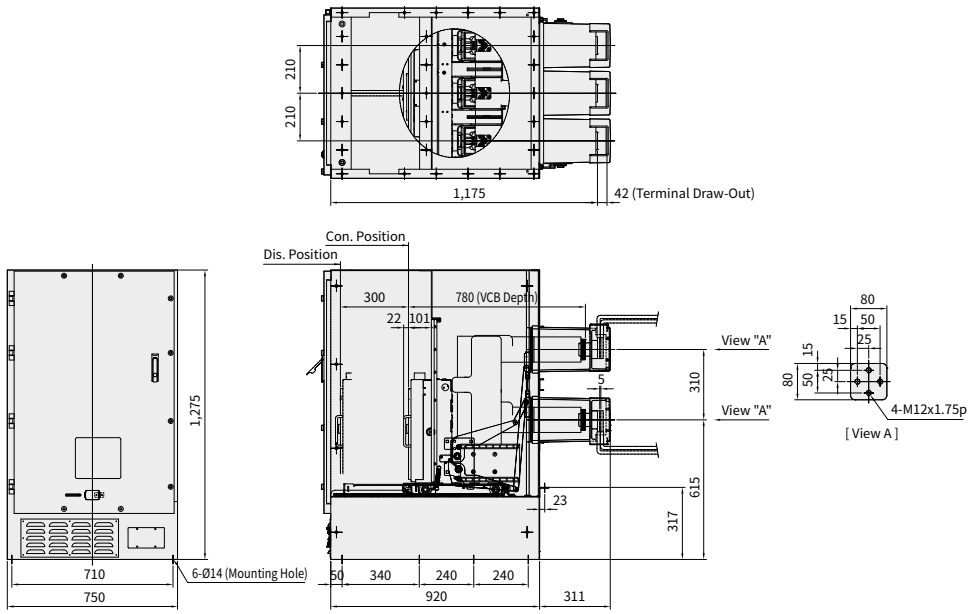

※ Dimension on this page are subject to change without notice.

ME-Type Vacuum Circuit Breakers (24/25.8 kV) Draw-Out Type, Screw-Type, Phase-to-Phase Distance 210 mm

HGV 6111F
HGV 6112
HGV 6114
HGV 6141
HGV 6142
HGV 6144

Unit : mm

- 630/1,250 A : Terminal Busbar 1 ea
- 2,000 A : Terminal Busbar 2 ea

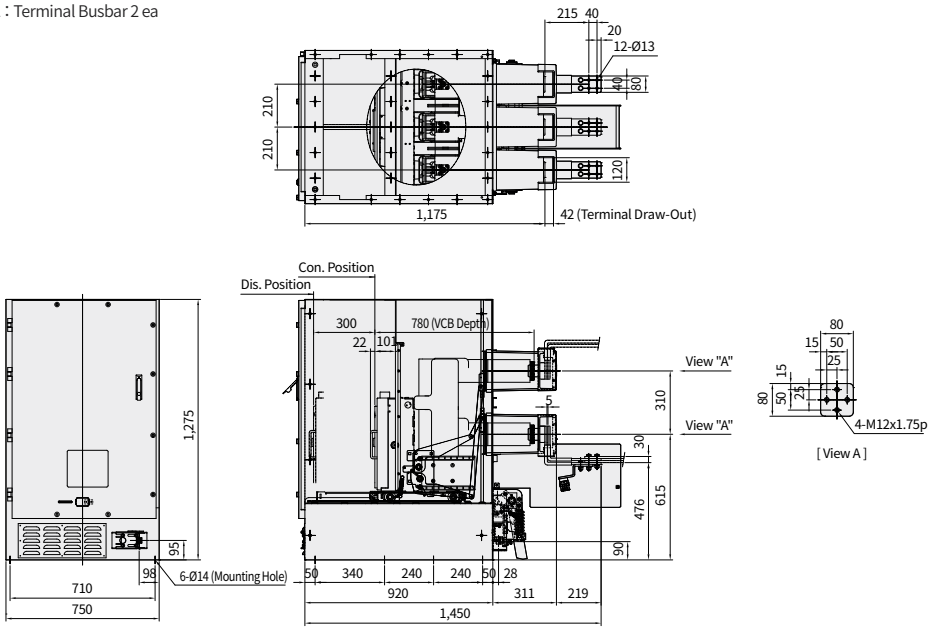

XA-Type Vacuum Circuit Breakers (24/25.8 kV) Fixed-Type, Phase-to-Phase Distance 210 mm

HGV 6144F

Unit : mm

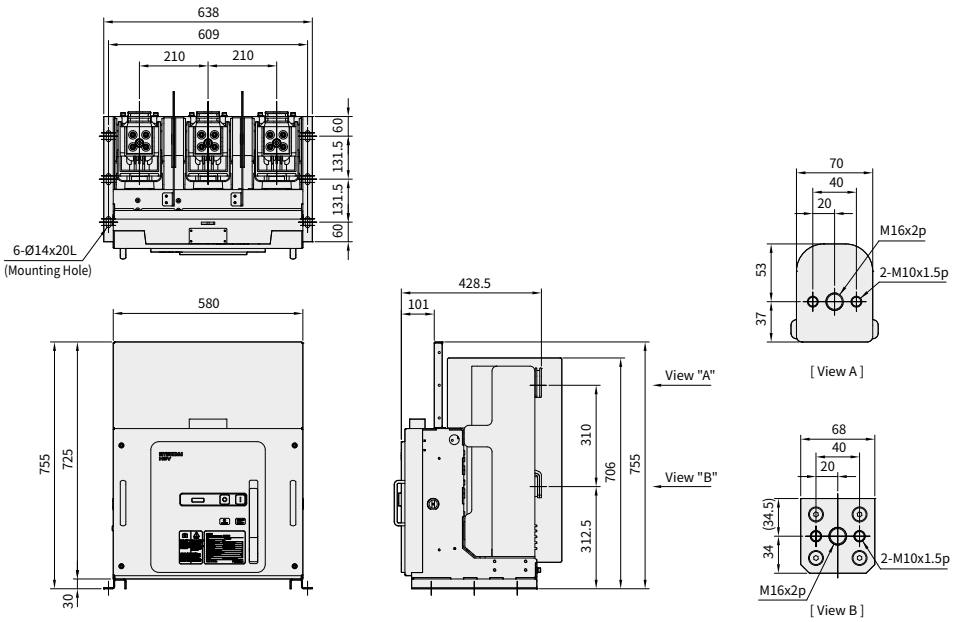

※ Dimension on this page are subject to change without notice.

Dimensions

ES-Type Vacuum Circuit Breakers (24/25.8 kV) Draw-Out Type, Lever-Type, Phase-to-Phase Distance 210 mm

Unit : mm

HGV 6144F

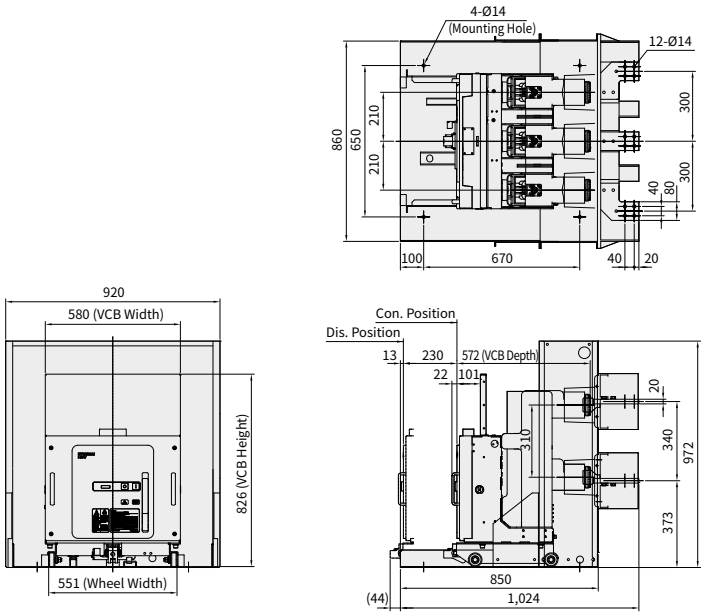

FS-Type Vacuum Circuit Breakers (24/25.8 kV) Draw-Out Type, Lever-Type, Phase-to-Phase Distance 210 mm

Unit : mm

HGV 6144F

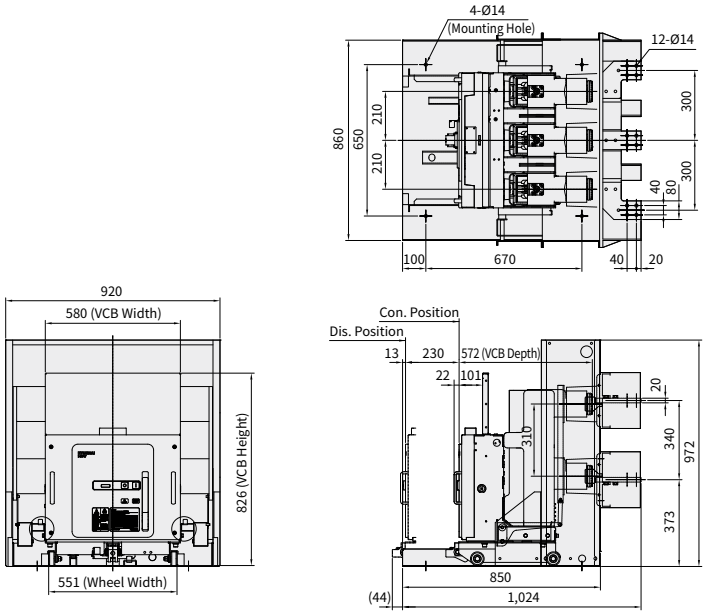

※ Dimension on this page are subject to change without notice.

IXA-Type Vacuum Circuit Breakers (7.2/12 kV) Fixed-Type, Phase-to-Phase Distance 275 mm

Unit : mm

HGV 1156I
HGV 1157
HGV 1158
HGV 1166
HGV 1167
HGV 1168
HGV 1176
HGV 1177
HGV 1178
HGV 2156
HGV 2157
HGV 2158
HGV 2166
HGV 2167
HGV 2168
HGV 2176
HGV 2177
HGV 2178
HGV 3156
HGV 3157
HGV 3158
HGV 3166
HGV 3167
HGV 3168
HGV 3176
HGV 3177
HGV 3178

- 2,500 A/3,150 A does not have fan
- 4,000 A requires fan (For fan capacity and ventilation path, contact us)

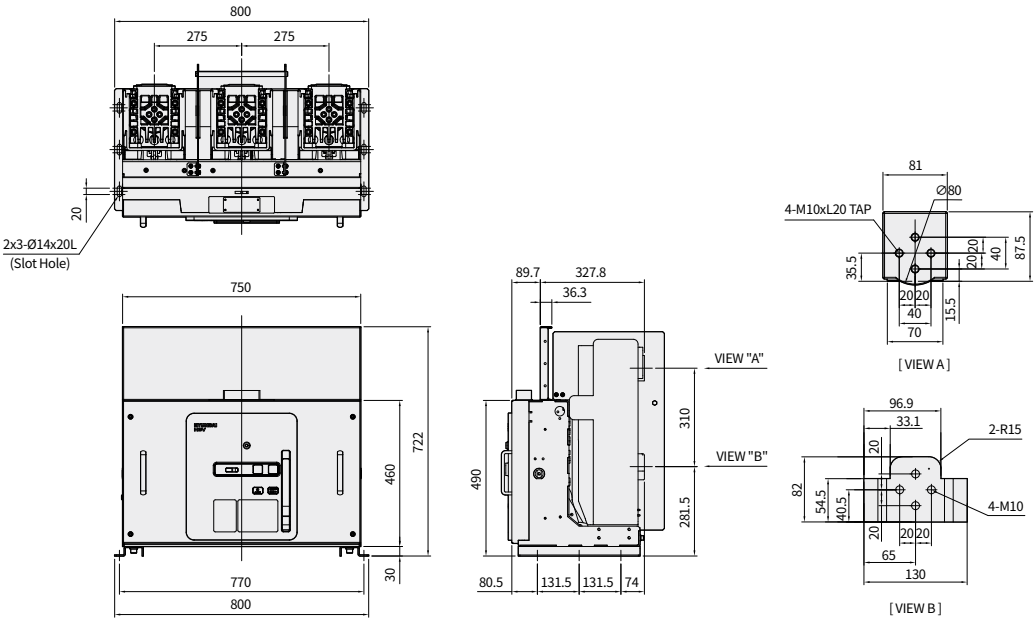

IGS-Type Vacuum Circuit Breakers (7.2/12/17.5 kV) Draw-Out Type, Phase-to-Phase Distance 275 mm

Unit : mm

HGV 1156I
HGV 1157
HGV 1158
HGV 1166
HGV 1167
HGV 1168
HGV 1176
HGV 1177
HGV 1178
HGV 2156
HGV 2157
HGV 2158
HGV 2166
HGV 2167
HGV 2168
HGV 2176
HGV 2177
HGV 2178
HGV 3156
HGV 3157
HGV 3158
HGV 3166
HGV 3167
HGV 3168
HGV 3176
HGV 3177
HGV 3178

- Pushing-Drawing Distance : 200 mm
- 2,500 A/3,150 A does not have fan
- 4,000 A has four fans on its cradle but does not have fan driving unit such as thermostat. (For inquiries about forced circulation method of fan, contact us)

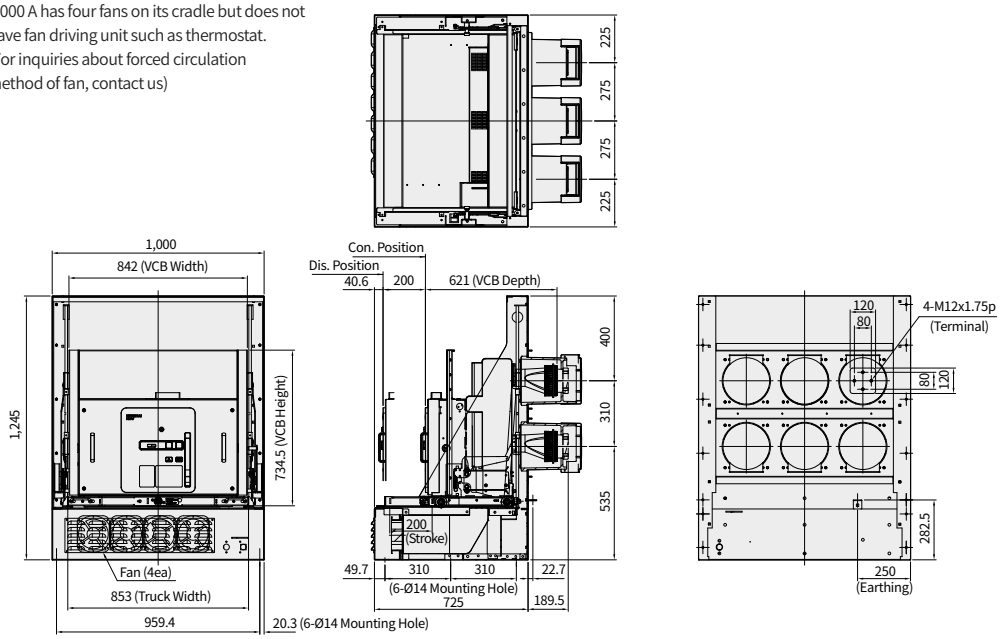

※ Dimension on this page are subject to change without notice.

Dimensions

IMS-Type Vacuum Circuit Breakers (7.2/12/17.5 kV) Draw-Out Type, Phase-to-Phase Distance 275 mm

Unit : mm

HGV 1156I
HGV 1157
HGV 1158
HGV 1166
HGV 1167
HGV 1168
HGV 1176
HGV 1177
HGV 1178
HGV 2156
HGV 2157
HGV 2158
HGV 2166
HGV 2167
HGV 2168
HGV 2176
HGV 2177
HGV 2178
HGV 3156
HGV 3157
HGV 3158
HGV 3166
HGV 3167
HGV 3168
HGV 3176
HGV 3177
HGV 3178

- Pushing-Drawing Distance : 200 mm
- 2,500 A/3,150 A does not have fan
- 4,000 A has four fans on its cradle but does not have fan driving unit such as thermostat. (For inquiries about forced circulation method of fan, contact us)

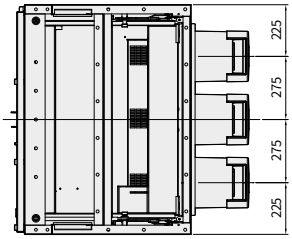

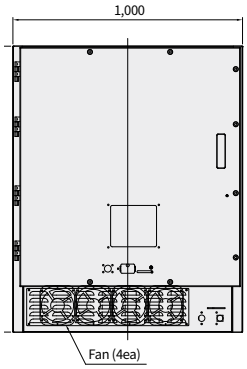

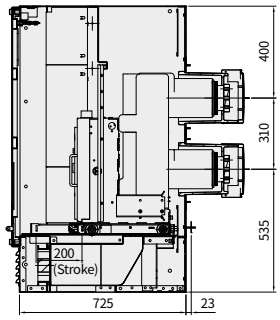

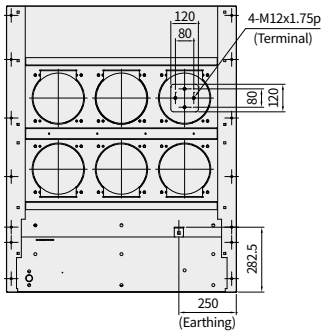

IGE-Type Vacuum Circuit Breakers (7.2/12/17.5 kV) Draw-Out Type, Phase-to-Phase Distance 275 mm

Unit : mm

HGV 1156I
HGV 1157
HGV 1158
HGV 1166
HGV 1167
HGV 1168
HGV 2156
HGV 2157
HGV 2158
HGV 2166
HGV 2167
HGV 2168
HGV 2176
HGV 2177
HGV 2178
HGV 3156
HGV 3157
HGV 3158
HGV 3166
HGV 3167
HGV 3168
HGV 3176
HGV 3177
HGV 3178

- Pushing-Drawing Distance : 200 mm
- 2,500 A/3,150 A does not have fan
- 4,000 A has four fans on its cradle but does not have fan driving unit such as thermostat. (For inquiries about forced circulation method of fan, contact us)
- 2,500/3,150/4,000 A : Terminal Busbar 3 ea

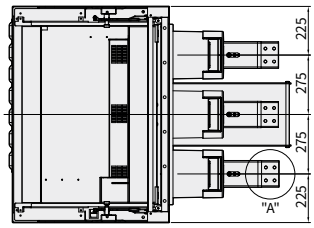

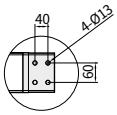

Detail "A"

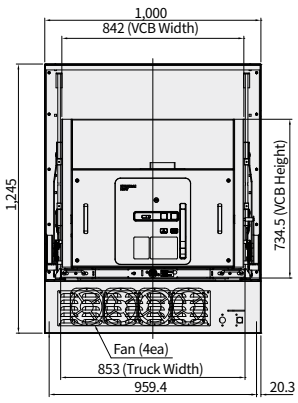

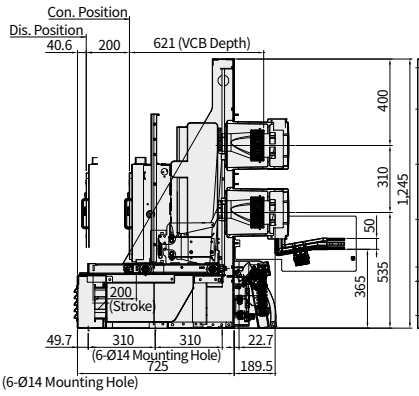

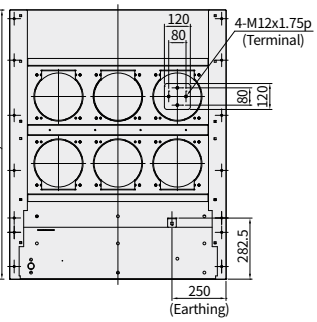

※ Dimension on this page are subject to change without notice.

IME-Type Vacuum Circuit Breakers (7.2/12/17.5 kV) Draw-Out Type, Phase-to-Phase Distance 275 mm

Unit : mm

HGV 1156I
HGV 1157
HGV 1158
HGV 1166
HGV 1167
HGV 1168
HGV 2156
HGV 2157
HGV 2158
HGV 2166
HGV 2167
HGV 2168
HGV 2176
HGV 2177
HGV 2178
HGV 3156
HGV 3157
HGV 3158
HGV 3166
HGV 3167
HGV 3168
HGV 3176
HGV 3177
HGV 3178

- Pushing-Drawing Distance : 200 mm
- 2,500 A/3,150 A does not have fan
- 4,000 A has four fans on its cradle but does not have fan driving unit such as thermostat. (For inquiries about forced circulation method of fan, contact us)
- 2,500/3,150/4,000 A : Terminal Busbar 3 ea

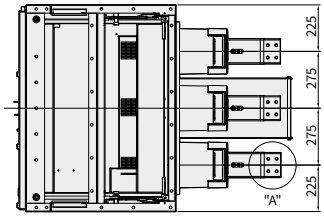

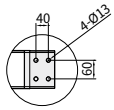

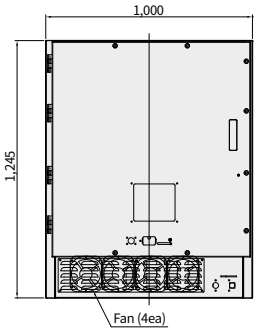

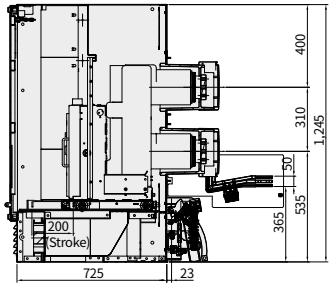

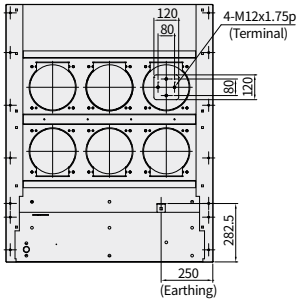

※ Dimension on this page are subject to change without notice.

Dimensions

GS-Type Vacuum Circuit Breakers (24 kV) Draw-Out Type, Screw-Type

Unit : mm

HVF 6146
HVF 6147

- Metal Shutter Type.
- Phase-to-Phase Distance : Body - 275 mm, Cradle - 275 mm

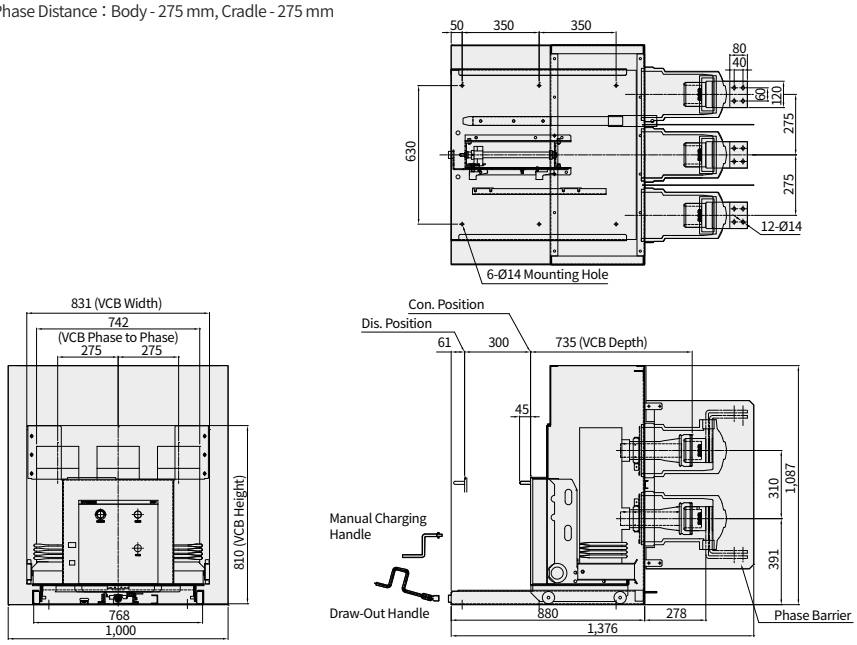

GS-Type Vacuum Circuit Breakers (24 kV) Draw-Out Type, Screw-Type

Unit : mm

HVF 6162
HVF 6164

- Metal Shutter Type.
- Phase-to-Phase Distance : Body - 210 mm, Cradle - 210 mm
- 1,250 A : Terminal Busbar 1 ea
- 2,000 A : Terminal Busbar 2 ea

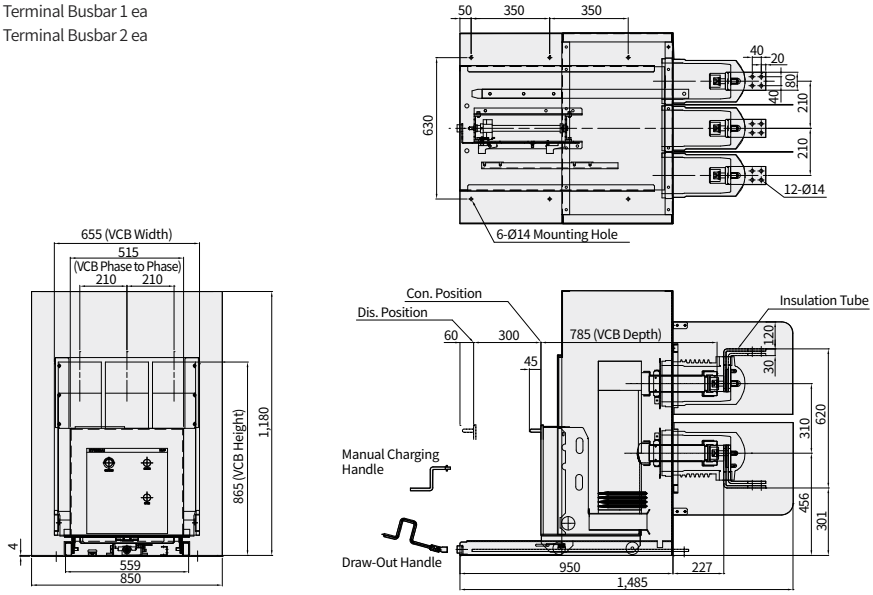

※ Dimension on this page are subject to change without notice.

GS-Type Vacuum Circuit Breakers (24 kV) Draw-Out Type, Screw-Type

HVF 6166
HVF 6167

Unit : mm

- Metal Shutter Type.
- Phase-to-Phase Distance : Body - 275 mm, Cradle - 275 mm

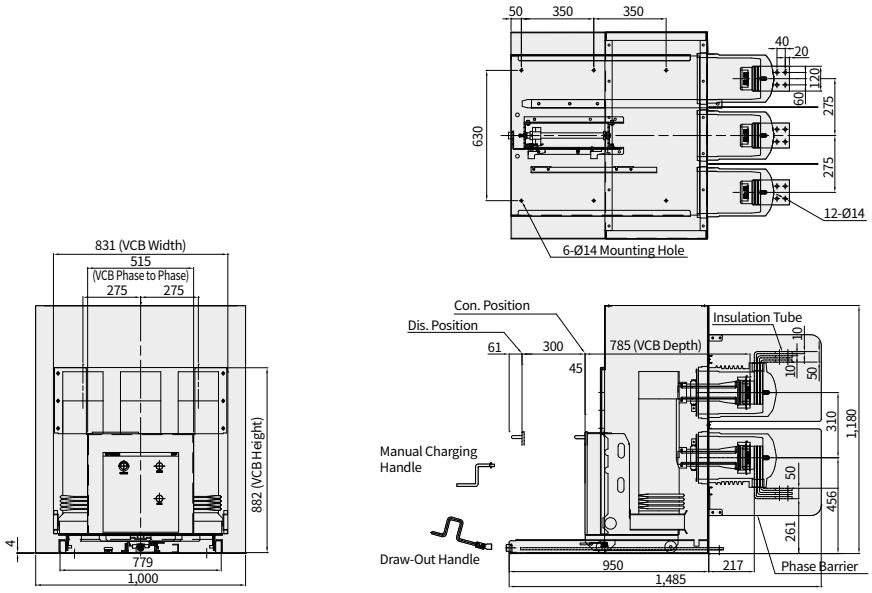

XA-Type Vacuum Circuit Breakers (36/38 kV) Fixed Type

HVF 7052
HVF 7054
HVF 7056
HVF 7057
HVF 7062
HVF 7064
HVF 7067

Unit : mm

- Phase-to-Phase Distance : Body - 275 mm

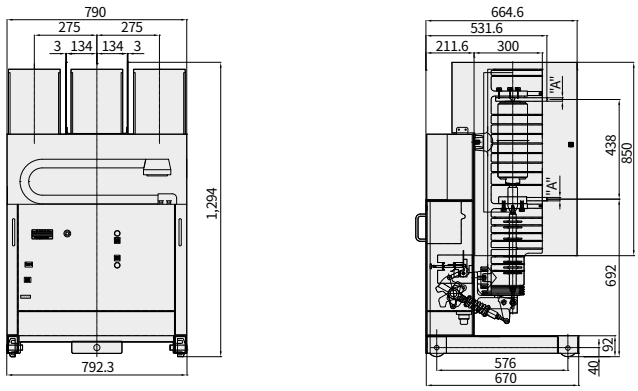

Model	Rated Current	Size "A"	Terminal Type	Main Terminal A Type	Main Terminal B Type
HVF7052/7062	1,250 A (1,200 A)	15	A	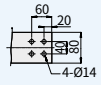	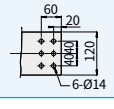
HVF7054/7064	2,500 A (2,000 A)	20			
HVF7056/7057/7067	3,150 A (3,000 A)	30	B		

※ Dimension on this page are subject to change without notice.

Dimensions

XA-Type Vacuum Circuit Breakers (36 kV) Fixed Type

HVF 7142
HVF 7144

Unit : mm

・Phase-to-Phase Distance : Body - 275 mm

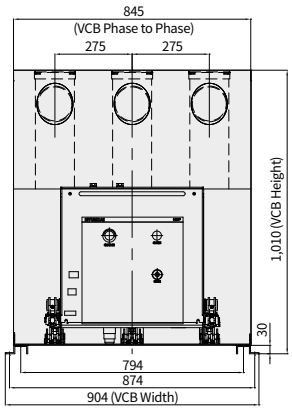

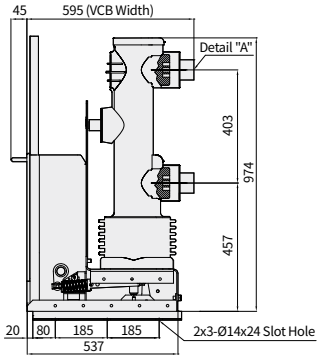

Item	1,250/2,000 A
Detail "A"	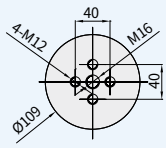

GS-Type Vacuum Circuit Breakers (36 kV) Draw-Out Type

HVF 7142
HVF 7144

Unit : mm

・Metal Shutter Type.
・Phase-to-Phase Distance : Body - 275 mm, Cradle - 275 mm
・1,250 A : Terminal Busbar 1 ea
・2,000 A : Terminal Busbar 2 ea

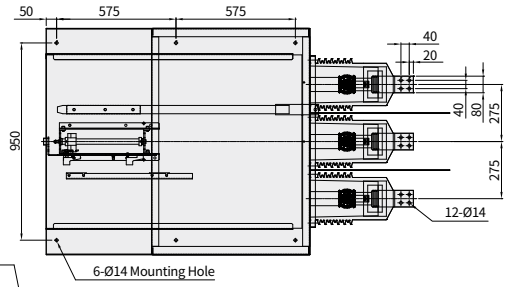

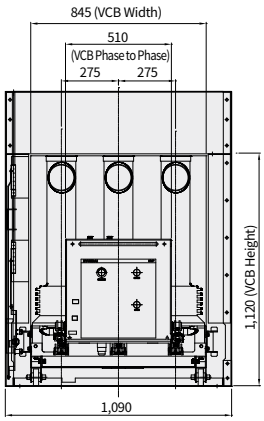

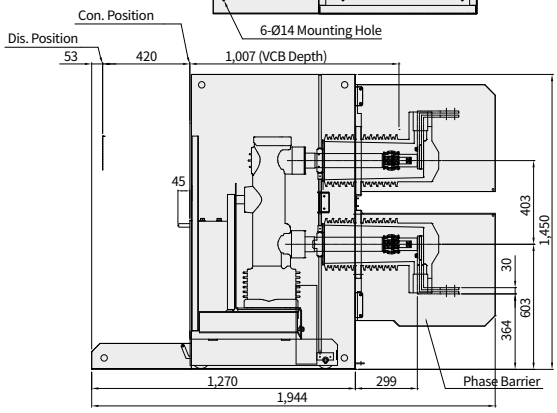

※ Dimension on this page are subject to change without notice.

GS-Type Vacuum Circuit Breakers (36/38 kV) Draw-Out Type, Screw-Type

Standard : IEC

HVF 7052
HVF 7054
HVF 7056
HVF 7062
HVF 7064
HVF 7066

Unit : mm

・Phase-to-Phase Distance : Body - 275 mm, Cradle - 275 mm

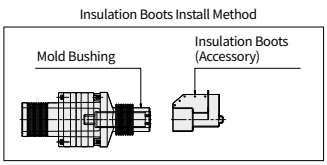

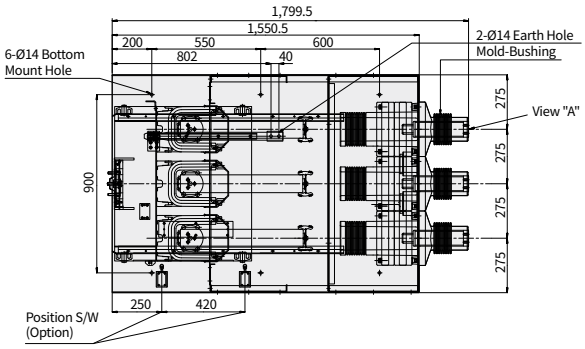

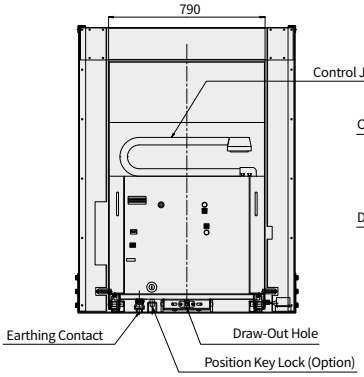

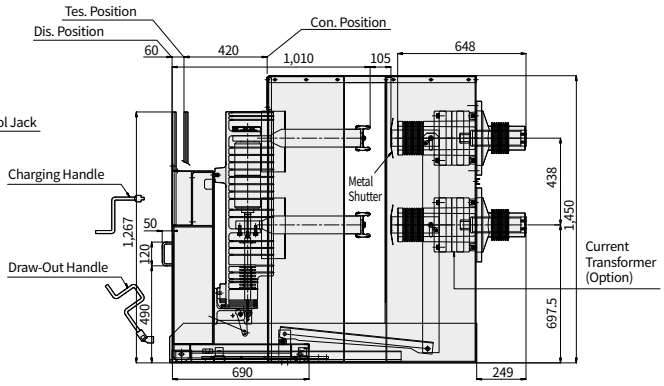

Model	Rated Current	Main Circuit Terminal View (View "A")
HVF7052/HVF7062	1,250 A	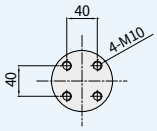
HVF7054/HVF7064	2,000 A	
HVF7056/HVF7066	2,500 A	

※ Dimension on this page are subject to change without notice.

Dimensions

GE-Type Vacuum Circuit Breakers (36 kV) Draw-Out Type, Screw-Type

Unit : mm

HVF 7142
HVF 7144

- Metal Shutter Type.
- Phase-to-Phase Distance : Body - 275 mm, Cradle - 275 mm
- 1,250 A : Terminal Busbar 1 ea
- 2,000 A : Terminal Busbar 2 ea

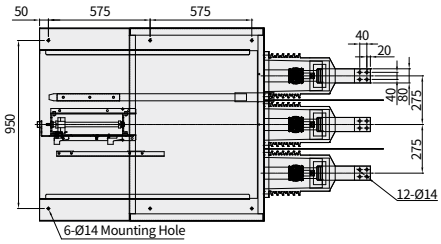

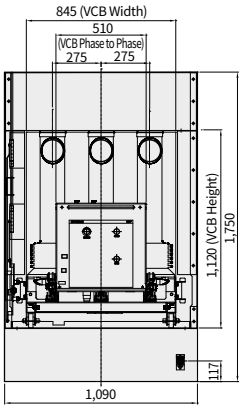

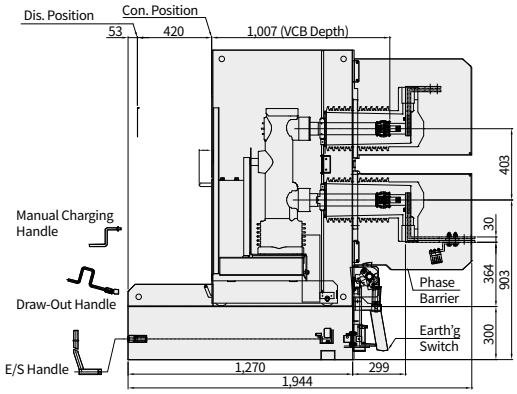

GS-Type Vacuum Circuit Breakers (36 kV) Draw-Out Type (Door), MCSG Type

Standard : IEC

Unit : mm

HVF 7057

- Insulation Shutter Type.
- GS-Class.
- VCB Phase-to-Phase Distance : 275 mm

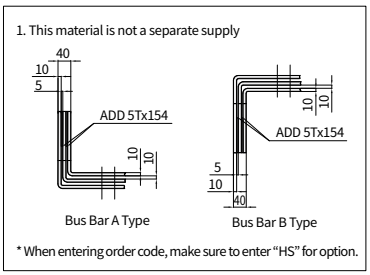

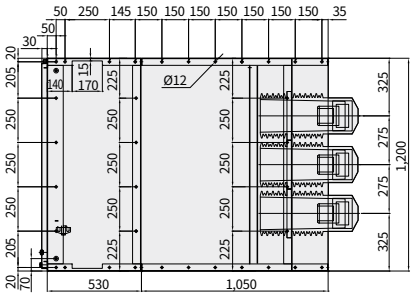

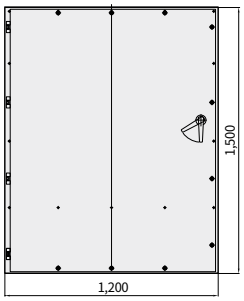

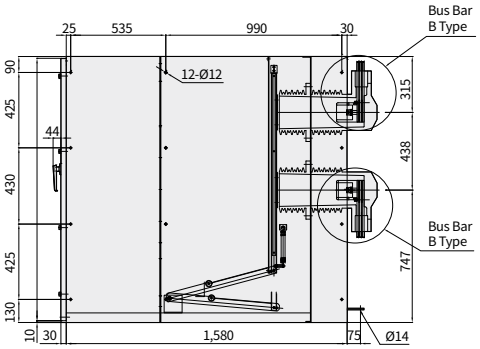

※ Dimension on this page are subject to change without notice.

GS-Type Vacuum Circuit Breakers (36/38 kV) GS Draw-Out Type, Screw-Type

Standard : ANSI

HVF 7052
HVF 7054
HVF 7056
HVF 7057
HVF 7062
HVF 7064
HVF 7067

Unit : mm

・Phase-to-Phase Distance : Body - 275 mm, Cradle - 275 mm

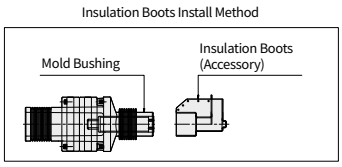

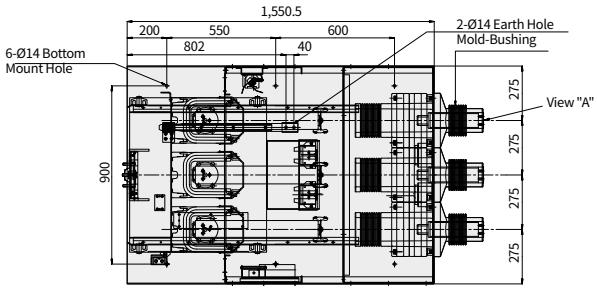

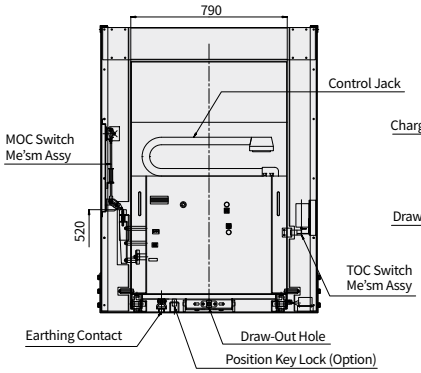

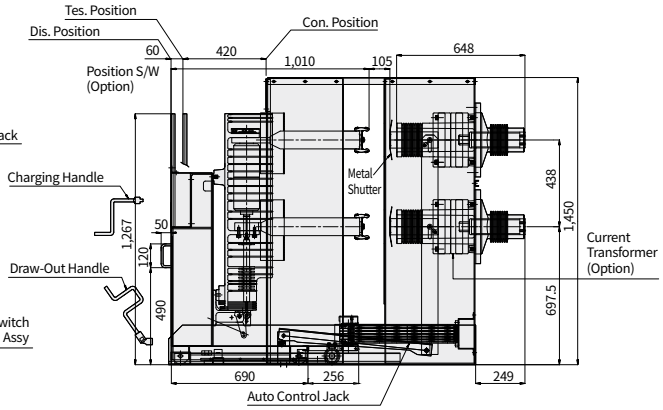

Model	Rated Current	Main Circuit Terminal View (View "A")
HVF7052/7062	1,250 A (1,200 A)	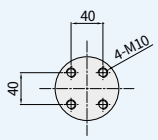
HVF7054/7064	2,000 A	
HVF7056/7057/7067	2,500/3,000 A	

※ Dimension on this page are subject to change without notice.

Dimensions

X-Type Vacuum Circuit Breakers (7.2 kV) Fixed Type

IEC 62271-100

HVG 1099
HVG 1131
HVG 1132

Unit : mm

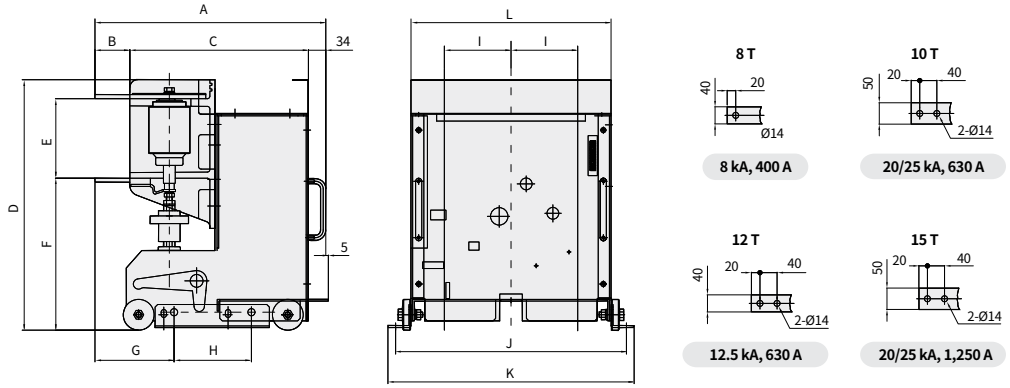

Model	Rated Current	A	B	C	D	E	F	G	H	I	J	K	L
HVG1099	8 kA 400 A	443	61	348	488	155	296	147	151	130	450	480	390
HVG1131/2	20 kA 630 A/20 kA 1,250 A	482	100					186		140			

E/F-Type Vacuum Circuit Breakers (7.2 kV) Draw-Out Type

IEC 62271-100

HVG 1099
HVG 1131
HVG 1132
HVG 1142

Unit : mm

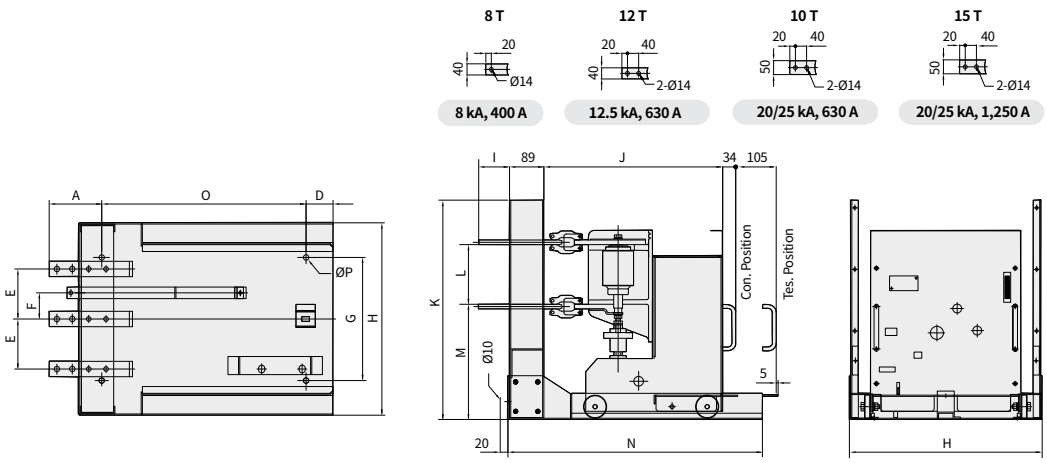

Model	Rated Current	A	D	E	F	G	H	I	J	K	L	M	N	O	ØP
HVG1099	8 kA 400 A	96	70	130	68	320	500	40	464	570	155	299	660	530	10
HVG1131	20 kA 630 A	136		140			540	80							
HVG1132	20 kA 1,250 A														
HVG1142	25 kA 1,250 A														

※ Dimension on this page are subject to change without notice.

G-Type Vacuum Circuit Breakers (7.2 kV) Draw-Out Type

IEC 62271-100

HVG 1099
HVG 1131
HVG 1132

Unit : mm

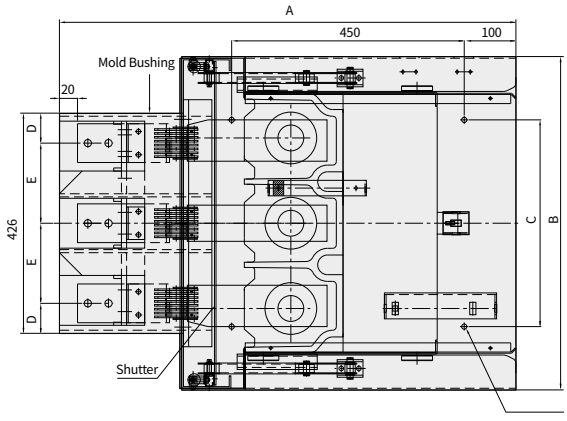

7.2 kV	8/12.5 kA	400 A	8 T	60, 20, 40, 2-Ø14
		630 A	12 T	
	20/25 kA	630 A	10 T	20, 40, 60, 2-Ø14
		1250 A	15 T	

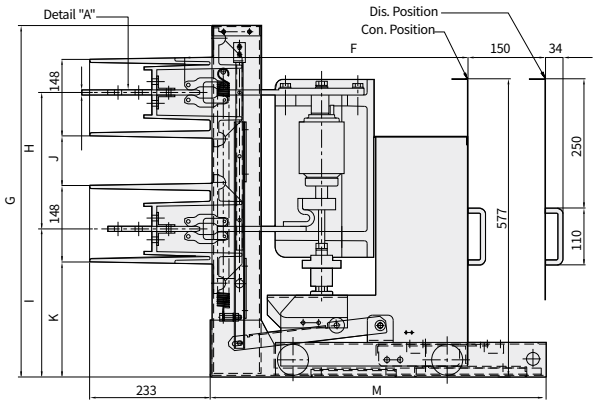

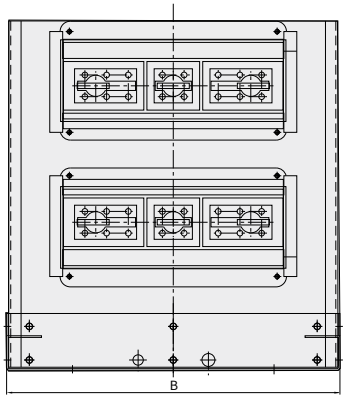

Model	Rated Current	A	B	C	D	E	F	G	H	I	J	K	L	M
HVG1099	8 kA 400 A	874	550	320	83	130	525	660	220	294	75	217	8	640
HVG1131	20 kA 630 A				73	140			223	291	75	217	10	
HVG1132	20 kA 1,250 A												15	

※ Dimension on this page are subject to change without notice.

Dimensions

Vacuum Contactor (3.6/7.2 kV) Fixed Type

X1 and fuse not attached ; 21 pin front draw-out control plug

Unit : mm

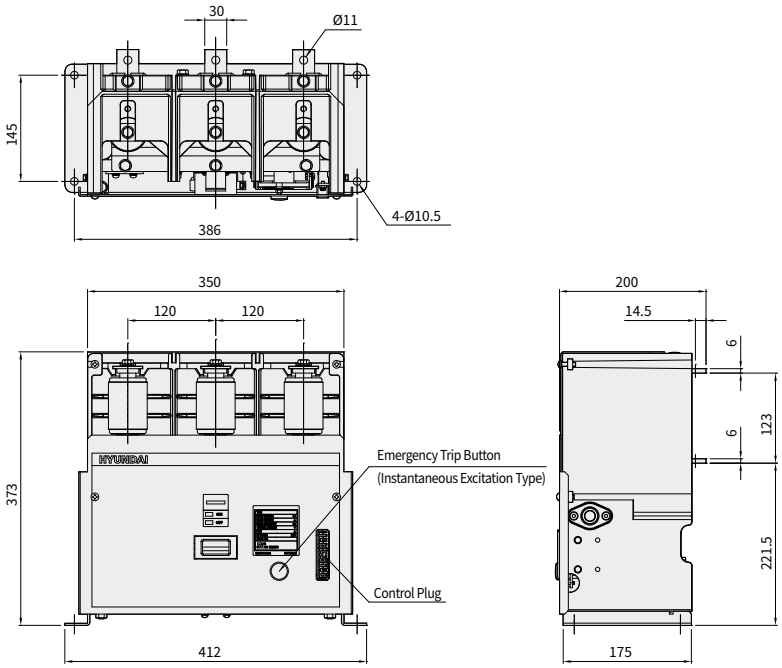

Vacuum Contactor (3.6/7.2 kV) Fixed Type

A1 and DIN fuse attached ; 21 pin front draw-out control plug

Unit : mm

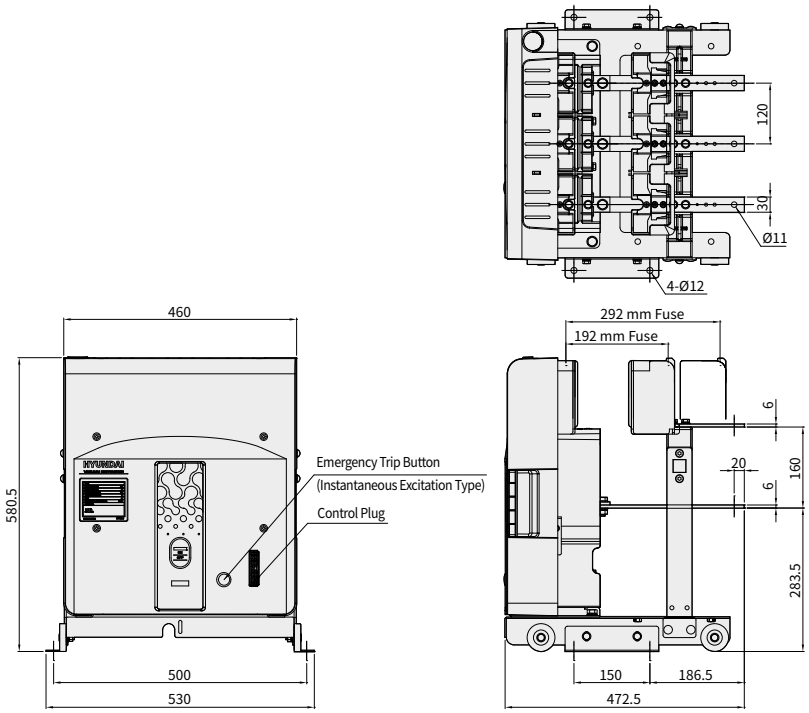

※ Dimension on this page are subject to change without notice.

Vacuum Contactor (3.6/7.2 kV) Fixed Type

A2 and KS fuse not attached ; 21 pin front draw-out control plug

Unit : mm

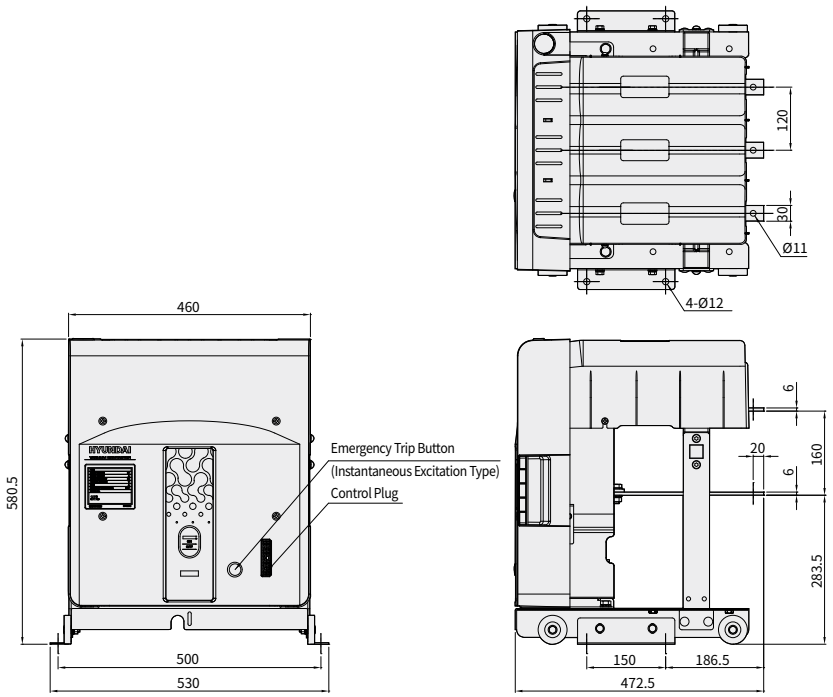

Vacuum Contactor (7.2 kV) Fixed Type

A3 and KS fuse not attached (300, 400 A for 7.2 kV motor) ; 21 pin front draw-out control plug

Unit : mm

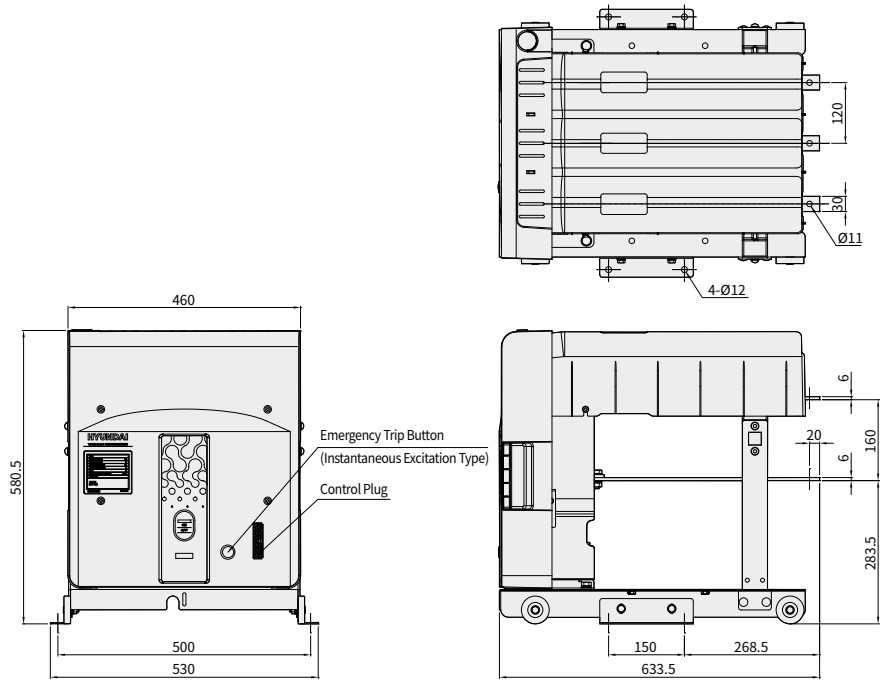

※ Dimension on this page are subject to change without notice.

Dimensions

E/F-Class Vacuum Contactor (3.6/7.2 kV) Draw-Out Type

B1 and fuse not attached ; 21 pin front draw-out control plug

Unit : mm

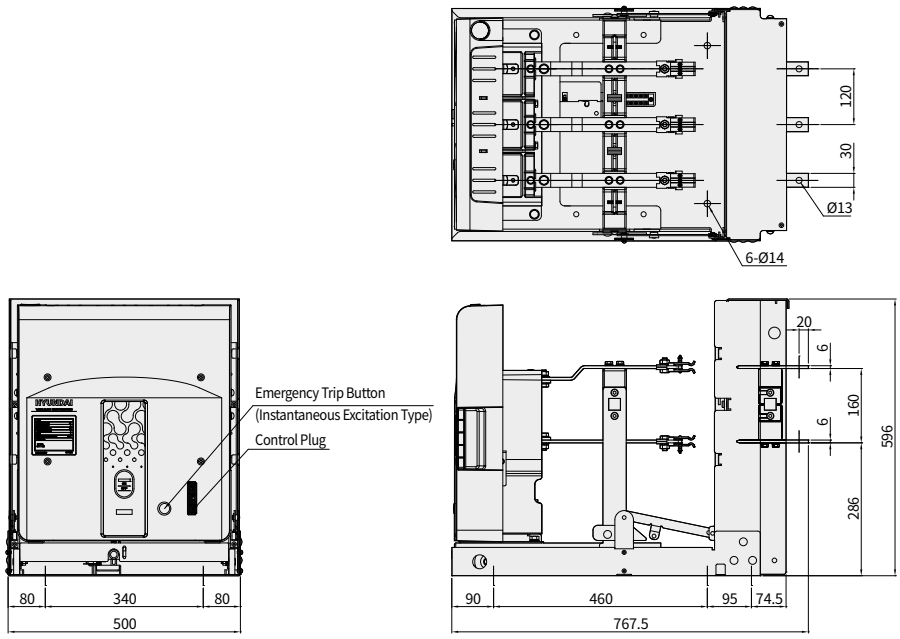

E/F-Class Vacuum Contactor (3.6/7.2 kV) Draw-Out Type

B2 and fuse not attached ; 52 pin upper part draw-out control plug

Unit : mm

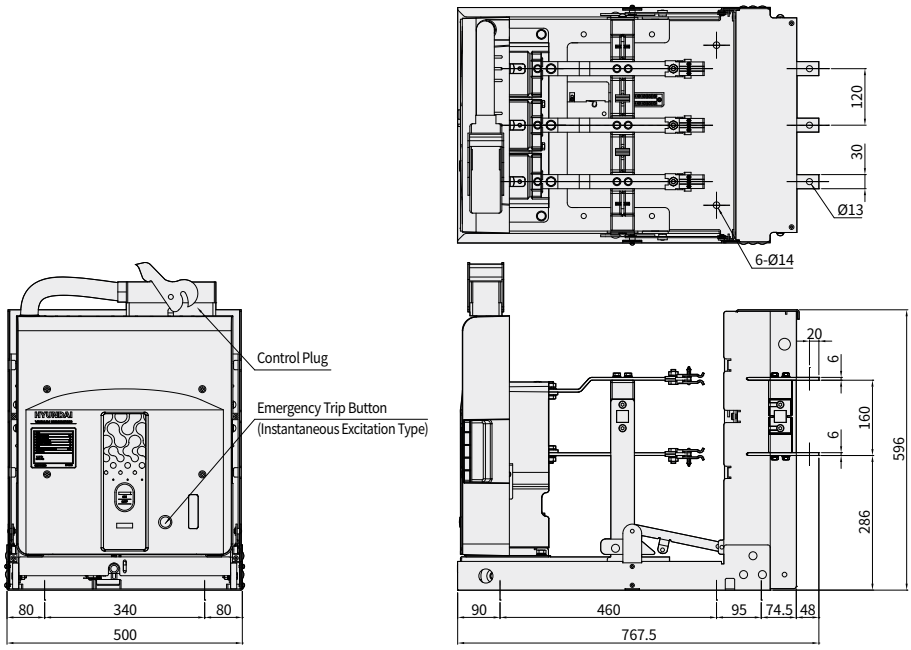

※ Dimension on this page are subject to change without notice.

E/F-Class Vacuum Contactor (3.6/7.2 kV) Draw-Out Type

D1 and DIN fuse attached ; 21 pin front draw-out control plug

Unit : mm

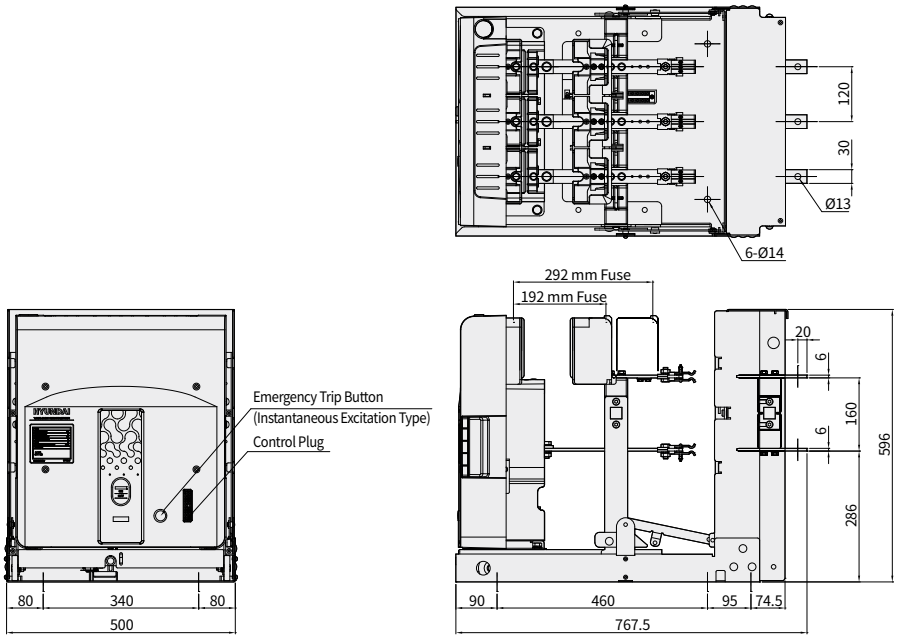

E/F-Class Vacuum Contactor (3.6/7.2 kV) Draw-Out Type

D2 and DIN fuse attached ; 52 pin upper part draw-out control plug

Unit : mm

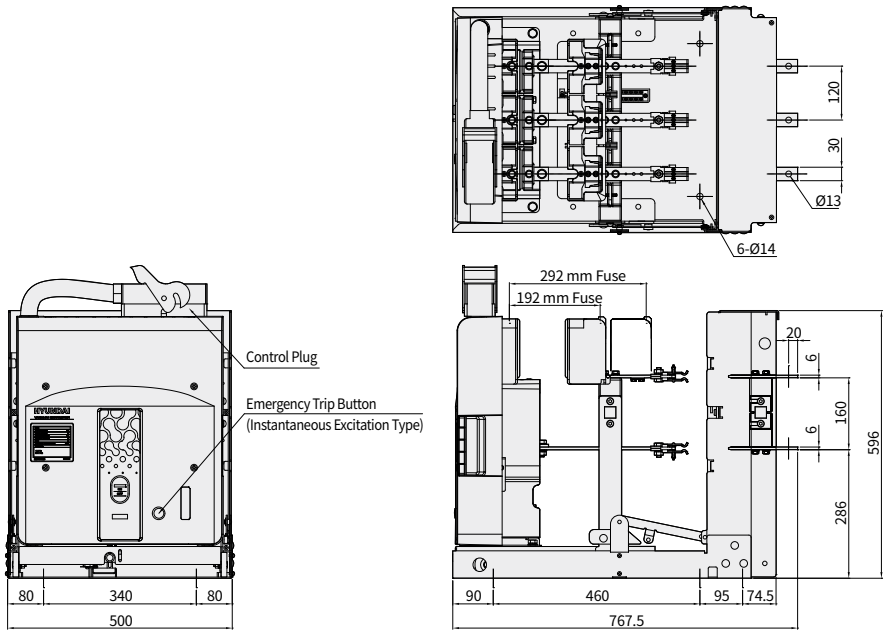

※ Dimension on this page are subject to change without notice.

Dimensions

E/F-Class Vacuum Contactor (3.6/7.2 kV) Draw-Out Type

D3 and KS fuse not attached ; 21 pin front draw-out control plug

Unit : mm

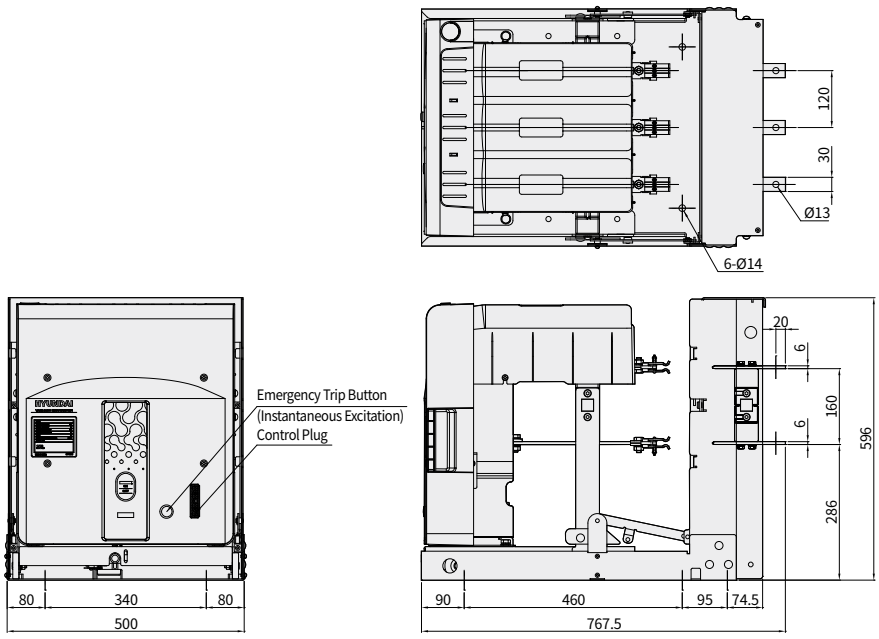

E/F-Class Vacuum Contactor (7.2 kV) Draw-Out Type

D4 and KS fuse not attached (300, 400 A for 7.2 kV motor) ;
21 pin front draw-out control plug

Unit : mm

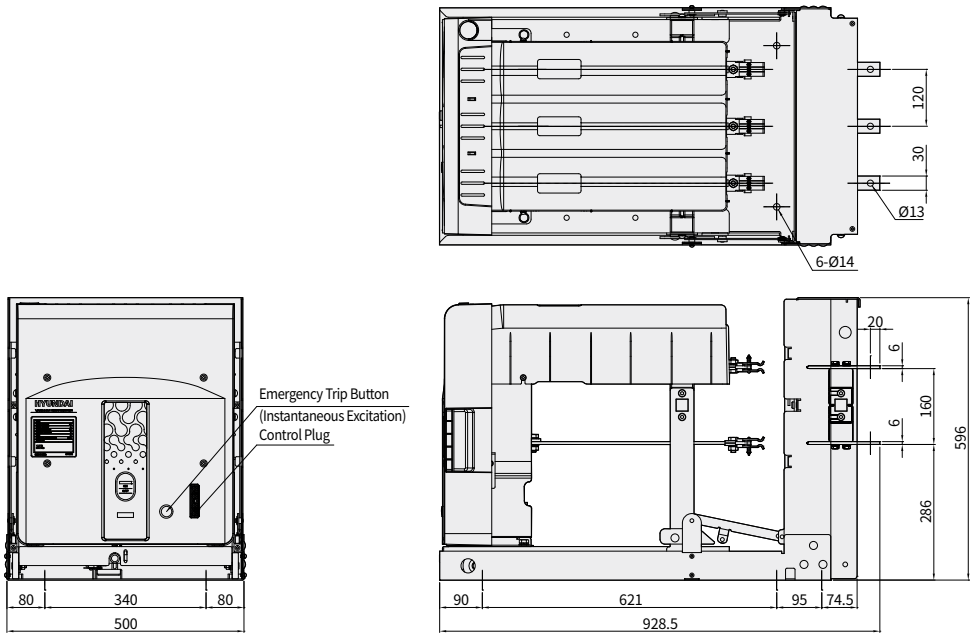

※ Dimension on this page are subject to change without notice.

E/F-Class Vacuum Contactor (3.6/7.2 kV) Draw-Out Type

D5 and KS fuse attached ; 52 pin upper part draw-out control plug

Unit : mm

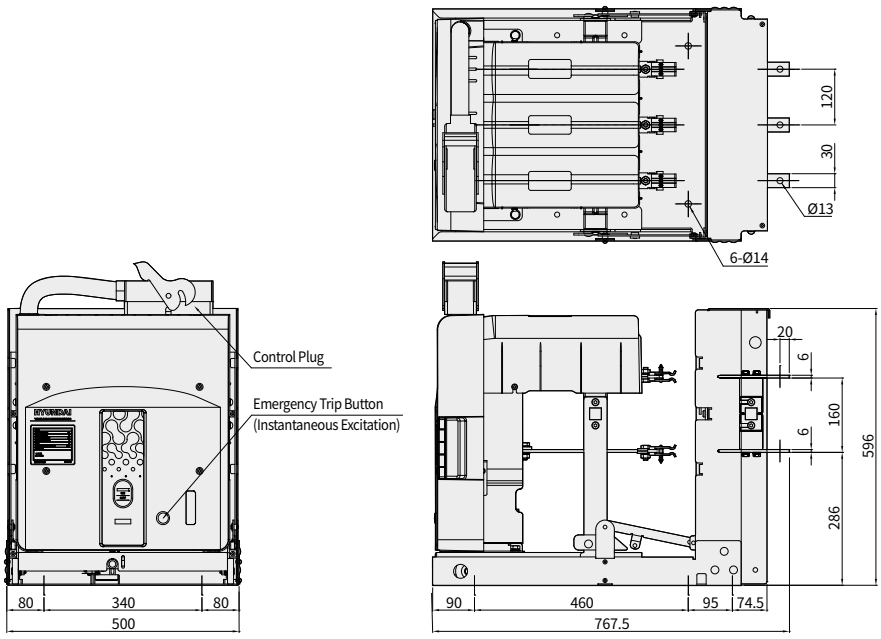

E/F-Class Vacuum Contactor (7.2 kV) Draw-Out Type

D6 and KS fuse not attached (300, 400 A for 7.2 kV motor) ;
52 pin upper part draw-out control plug

Unit : mm

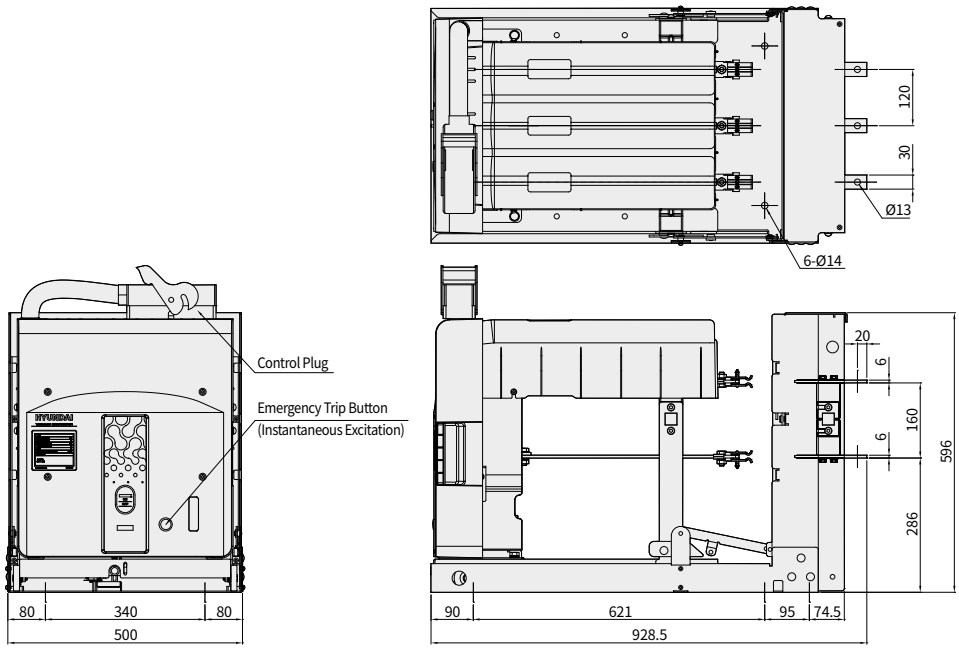

※ Dimension on this page are subject to change without notice.

Dimensions (Vacuum Interrupters)

HCV-3B

Unit : mm

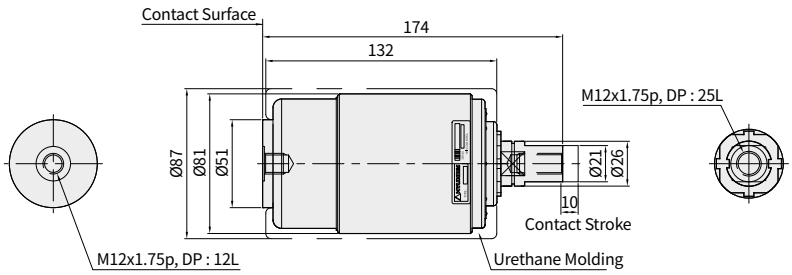

HCV-3D

Unit : mm

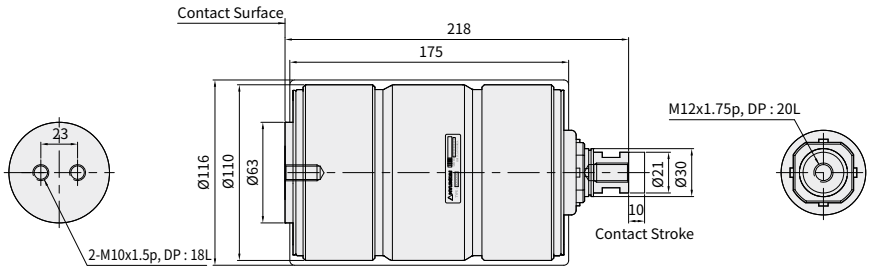

HCV-3E

Unit : mm

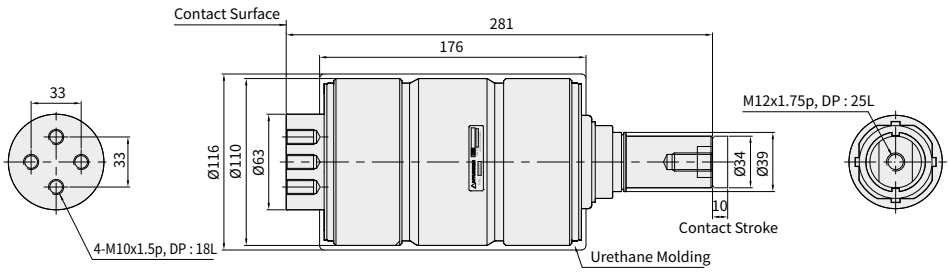

※ Dimension on this page are subject to change without notice.

HCV-3F

Unit : mm

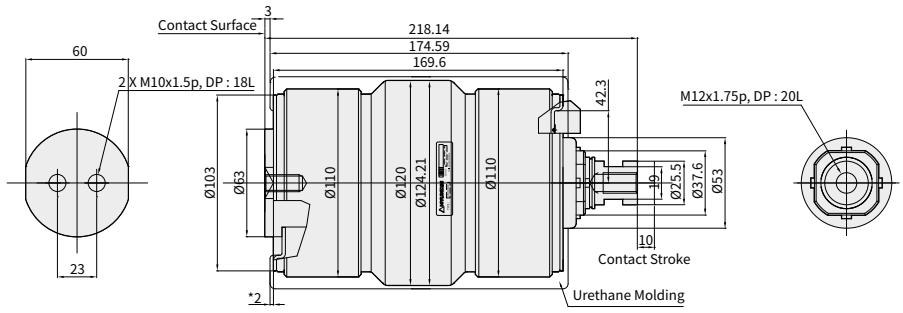

HCV-3G

Unit : mm

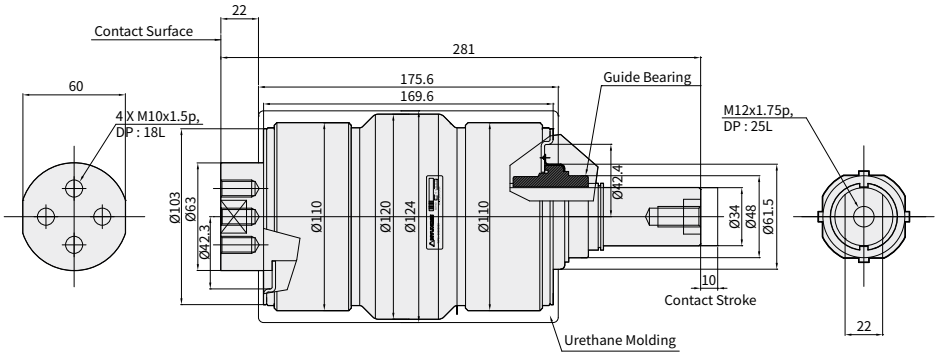

HCV-6A

Unit : mm

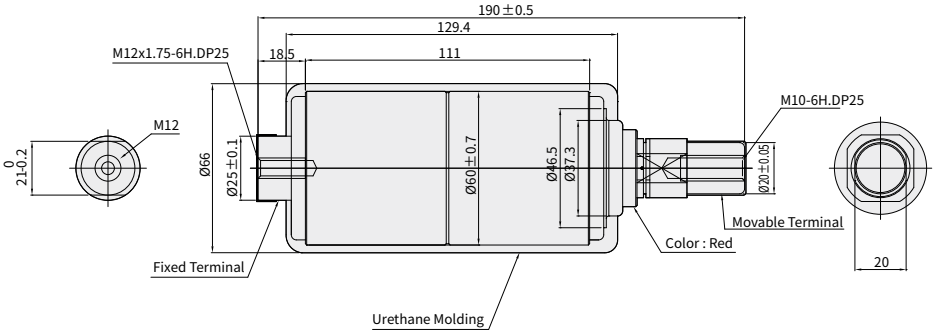

HCV-6B

Unit : mm

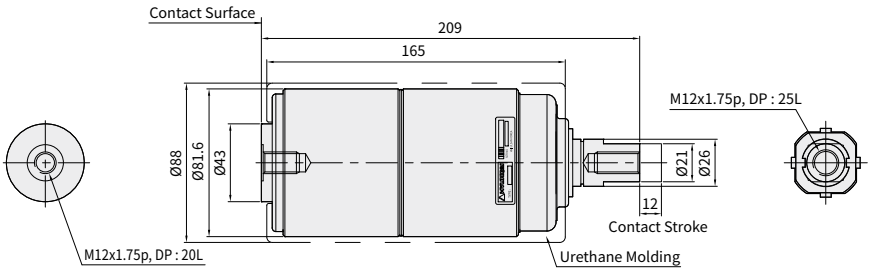

※ Dimension on this page are subject to change without notice.

Circuit Diagram

HGV Circuit Diagram

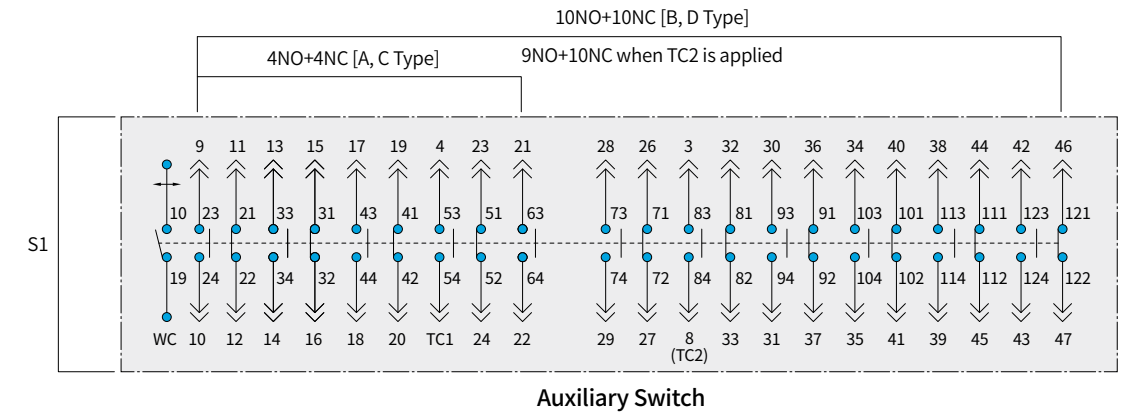

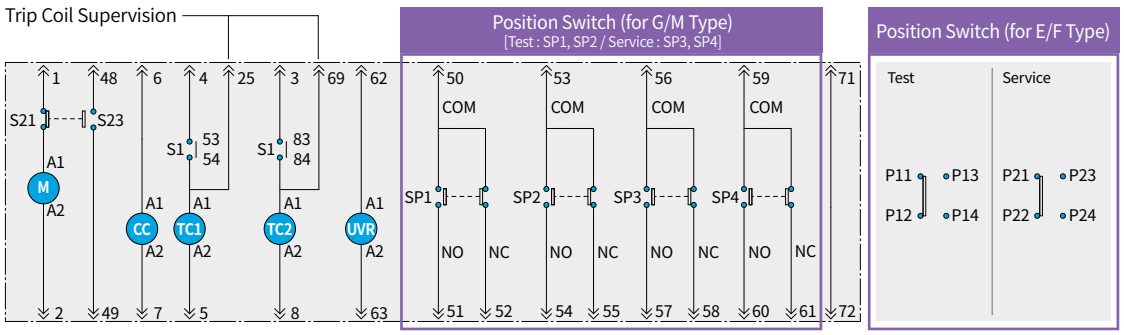

Legend			
M	Motor	S21	Motor Control Switch
CC	Closing Coil (Close)	S23	Spring Charged Limit Switch
TC1	Trip Coil (Open)	S1	Auxiliary Switch
TC2	Secondary Trip Coil	SP1 ~ 4	Position Switch (Test : 2C, Service : 2C)
UVR	Under Voltage Release		

Earthing Switch Behavior Monitoring Contact Circuit Diagram

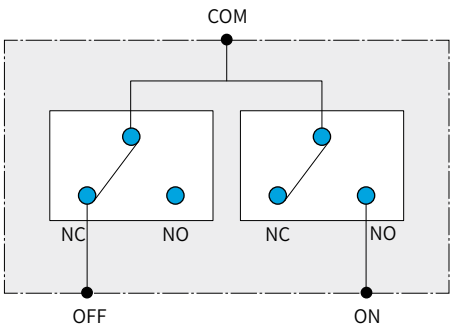

Auxiliary Switch

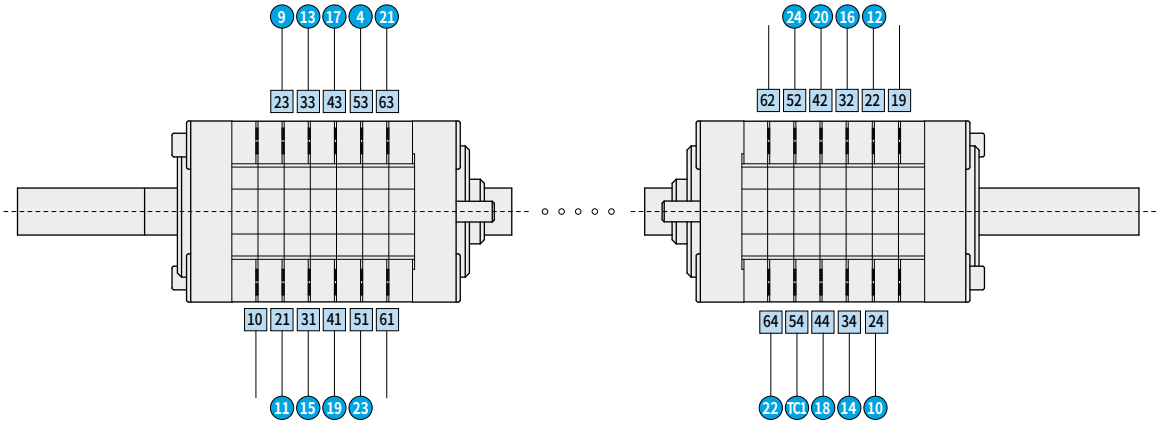

Control Jack Terminal No.

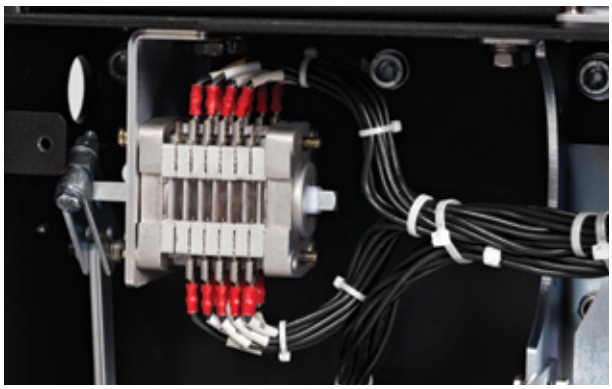

Auxiliary Switch

Control Jack Terminal

Circuit Diagram

HVF Circuit Diagram

Standard Circuit Diagram

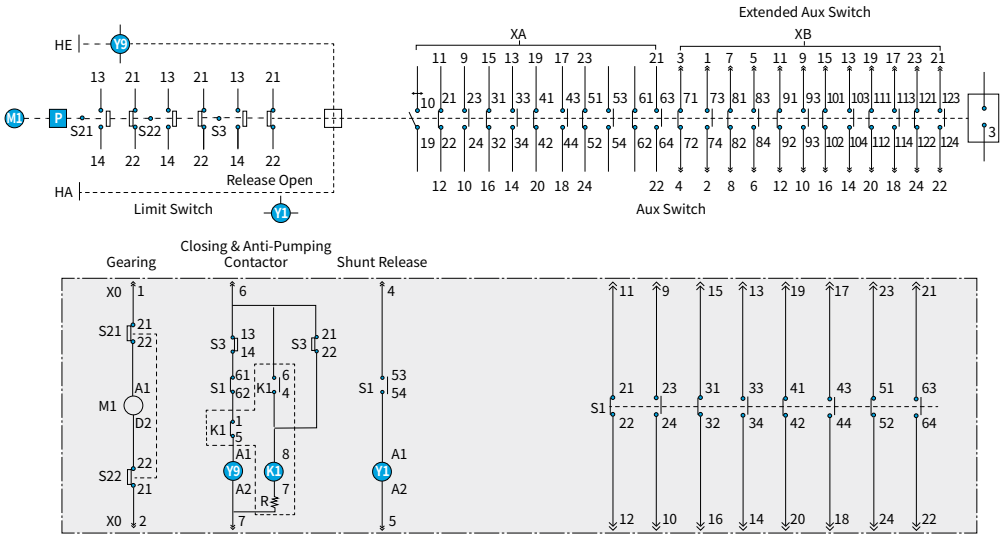

Varist and Attached Release Detached Circuit

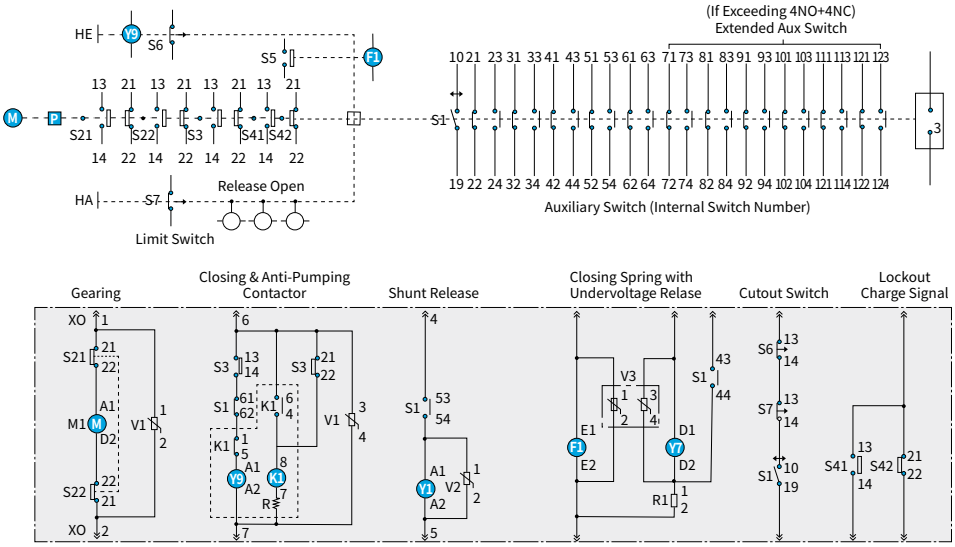

F1 ：Lockout
HA ：Manual Tripping
HE ：Manual Closing
K1 ：Anti-Pumping Relay
M1 ：Motor
P ：Stored Energy Mechanism
Y1 ：Tripping Solenoid
Y7 ：Under Voltage Release
Y9 ：Closing Solenoid
R1 ：Resistance
S1 ：Aux Switch
S21, S22：Limit Switch
(Charge spring and then interrupt motor circuit)
S3 ：Limit Switch (K1 Control)
S41, S42 ：Limit Switch (Spring charging status signal)
S6, S7：Cutout Switch
V1, V2, V3 ：Varistor Module
X0 ：Plug/Socket

※ For request for B type jack, circuit diagram has the same draw-out number of additional aux contact circuit diagram of HVG VCB on page 115.
For request for draw-out type option, No. 3 and 8 are drawn-out by default. For request for fixed type option, No. 21 and 22 are drawn out by default.
For request for two or more options, refer to Vacuum Circuit Breakers (Technical Data) on our website.
No 10 and 19 of S1 is a wiping contact ; connecting it in parallel with 'b' contact enables early 'b' contact configuration. (Option：WC)
M1 (Charging Motor) can be used both for AC and DC.

HVG Circuit Diagram

DC Operation Control, Standard Contact and Position Switch

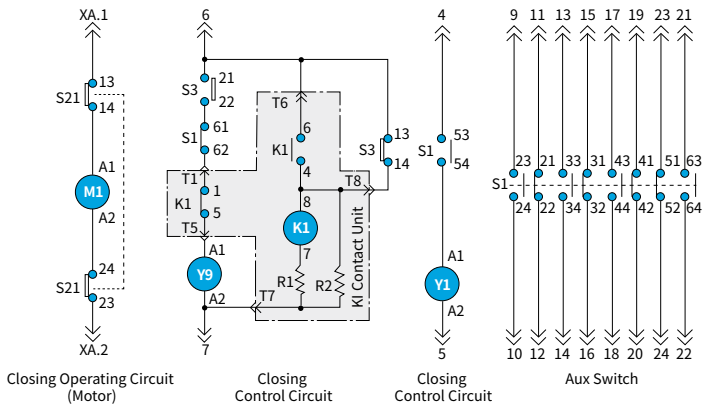

K1 : Anti Pumping Relay
M1 : Motor
S3 : Limit Switch
S21 : Limit Switch
S1 : Aux Switch
V1 : Rectifier
V2 : Rectifier
R1 : Resistance
R2 : Resistance
Y1 : Tripping Solenoid
Y9 : Closing Solenoid
XA : Plug/Socket
XB : Plug/Socket

Alternating Operation Control and Additional Aux Contacts

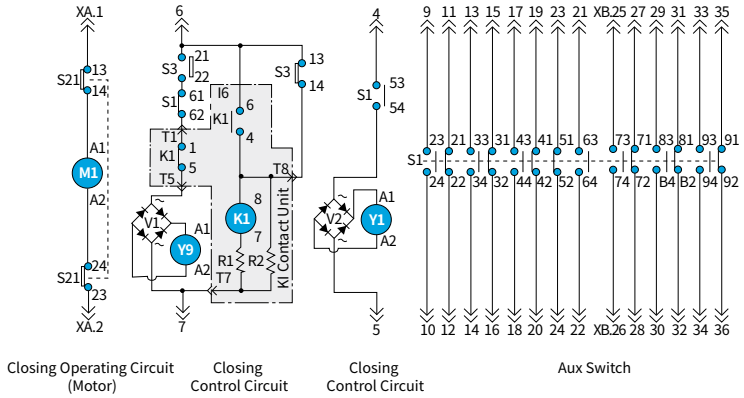

※ Additional aux contacts are wired to secondary socket and XB.
Wiring cables uses 1.5mm^2 KIV wires to get wired with 22-pole socket fixed to the front of breaker.
M1 (Charging Motor) can be used both for AC and DC.

Position Switch Standard Circuit Diagram

For Both HVF and HVG

Test Position

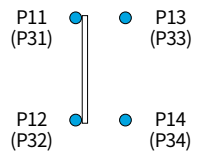

Contact Position

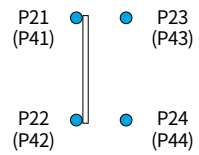

※ If body is placed in a test position, it is connected to P13 and P14.
If body is place in a contact position, it is connected to P23 and P24.
( ) Number in parenthesis refers to number for P4 request.

Earthing Switch Behavior Contact Circuit Diagram

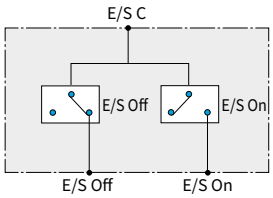

Circuit Diagram

UVC Circuit Diagram

Continuous Excitation Type (3.6/7.2 kV)

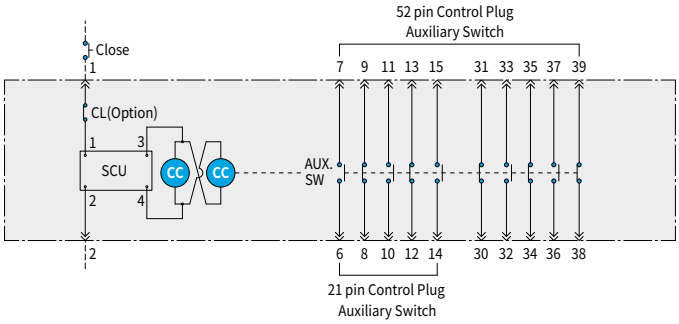

CL : Electrical Position Interlock (Attachment)
CC : Closing Coil
AUX, Switch : Aux Contact
TC : Trip Coil
CTD : Condenser Trip Device
SCU : Controller

Instantaneous Excitation Type (3.6/7.2 kV)

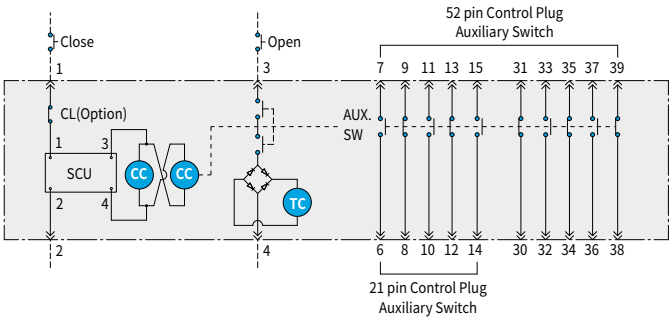

Instantaneous Excitation Type (CTD Attached) (3.6/7.2 kV)

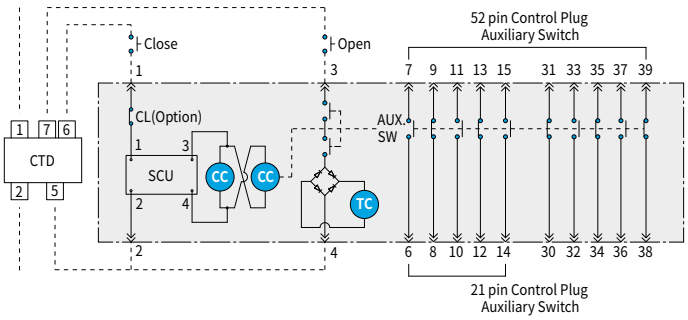

Attachment (3.6/7.2 kV)

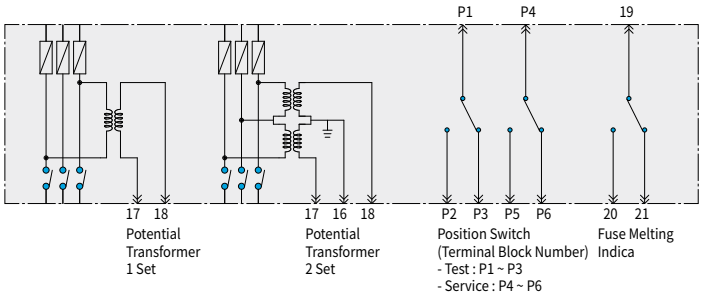

Order Code

HGV Type (For Body + Cradle Order)

HGV	61	4	4	F	GS
Model	Rated Voltage	Rated Breaking	Rated Current	Inter-Phase Distance	Installation Method

Model		Rated Voltage		Rated Breaking		Rated Current		Inter-Phase Distance		Installation Method	
HGV	HG Vacuum Circuit Breakers	11	7.2 kV	1	12.5 kA	1	630 A	C	150	XA	Fixed-Type
		21	12 kV	4	25 kA	2	1,250 A	D	165	EA	Draw-Out (E-Type Body)
		31	17.5 kV	5	31.5 kA	4	2,000 A	F	210	ES	Draw-Out (Shutter Unattached Cradle)
		61	24/25.8 kV	6	40 kA	6	2,500 A	I	275	E3	Draw-Out (ES-Type 24 kV, Inter-Phase 300 mm, 630/1,250 A)
				7	50 kA	7	3,150 A			FA	Draw-Out (F-Type Body)
						8	4,000 A			FS	Draw-Out (Insulating Shutter Attached Cradle)
										F3	Draw-Out (FS-Type 24 kV, Inter-Phase 300 mm, 630/1,250 A)
										GA	Draw-Out (GS-Type Body)
										GS	Draw-Out (Bushing and Metal Shutter Attached Cradle)
										GE [1)]	Draw-Out (GS-Type + Earthing Switch)
										MS	Draw-Out (Cell Type Cradle)
										ME [1)]	Draw-Out (MS-Type + Earthing Switch)

HGV Type (For Separate Order for Cradle)

GVL	61	4	4	F	ME
Model	Rated Voltage	Rated Breaking	Rated Current	Inter-Phase Distance	Installation Method

Model		Rated Voltage		Rated Breaking		Rated Current		Inter-Phase Distance		Installation Method	
GVL	HG Vacuum Circuit Breakers Cradle	11	7.2 kV	1	12.5 kA	1	630 A	C	150	ES, E3	Draw-Out
		21	12 kV	4	25 kA	2	1,250 A	D	165	FS, F3	Draw-Out
		31	17.5 kV	5	31.5 kA	4	2,000 A	F	210	GS	Draw-Out
		61	24/25.8 kV	6	40 kA	6	2,500 A	I	275	GE [1)]	Draw-Out
				7	50 kA	7	3,150 A			MS	Draw-Out
						8	4,000 A			ME [1)]	Draw-Out

※ 1) Earthing switch attaching type should contain attachment "EE" in its order code.
2) R□ and C2 cannot be applied simultaneously.
3) Only available with UVR.
4) Apply both close button and trip button.
5) Only MS and ME types can be applied.
6) Applicable only to GA, GS, GE, MS, and ME types.
7) □ : A (4NO + 4NC applied), B (10NO + 10NC applied)
8) □ : 2 (1NO + 1NC applied per position), 4 (2NO + 2NC applied per position)
9) Applicable only to GE and ME.
10) Lead cable is not provided. (See 56 page)
11) Order for breaker only should contain "EI".
12) Applicable to 12 kV products. (See 36 page rating and specifications)
□ : 1 (Inter-phase 150 mm), 2 (Inter-phase 210 mm, 25 kA),
3 (Inter-phase 275 mm), 4 (Inter-phase 210 mm, 31.5/40/50 kA)

4	4	4	C	P2
Closing Operation (Motor) Voltage	Closing Control Voltage	Trip Control Voltage	Auxiliary Contacts and Control Circuit Connector	Attachments

1	DC 24 V
2	AC/DC 48 ~ 60 V
4	AC/DC 100 ~ 130 V
6	AC/DC 200 ~ 250 V

A [10]	Connector and Pin (4NO + 4NC)
B [10]	Connector and Pin (10NO + 10NC)
C	Lead Cable (4NO + 4NC)
D	Lead Cable (10NO + 10NC)

EE [1]	Earthing Switch Monitoring Contacts (1NO + 1NC Provided)
U□ [2]	Under Voltage Release (□: Order Number of the Control Voltage)
R□ [2]	Second Trip Coil (□: Order Number of the Control Voltage)
D□ [3]	UVR Delay Device (□: Order Number of the Control Voltage)
KG	Electrical, Mechanical Key Lock
BC [4]	Button Cover (Padlock Available, Key not Supplied)
C2 [2]	CT. Operated Release 1.0 A
PA	Position Padlock (Key not Supplied)
DI [5]	Door Interlock
JI [6]	Jack Interlock
N□ [7]	Flame Retardant Cable
P□ [8]	Position Switch
TS	Trip Supervision (Monitoring Circuit)
KP	Position Padlock Kirk Key
KE [9]	Earthing Switch Lock Kirk Key
OB [5]	Manual Operation Bar
EI [6] [11]	Plate to Prevent Earthing Switch after Pulling
B□ [12]	Special-Purpose Breaker
ZZ	Special Features or Attachment

0	0	0	0	KL
Closing Operation (Motor) Voltage	Closing Control Voltage	Trip Control Voltage	Auxiliary Contacts and Line	Attachments

0	None

0	None

KE	Earthing Switch Lock Kirk Key
EE [1]	Earthing Switch Monitoring Contacts (1NO + 1NC)
DM [5]	Door Interlock
TB [5]	Emergency Trip Bar
ZZ	Special Features or Accessories

Order Code

HVF Type (For Body + Cradle Order)

HVF	11	4	1	C	ES
Model	Rated Voltage	Rated Breaking	Rated Current	Inter-Phase Distance 1)	Installation Method

Model		Rated Voltage		Rated Breaking		Rated Current		Inter-Phase Distance 1)		Installation Method	
HVF	Vacuum Circuit Breakers	11	7.2 kV	1	12.5 kA	1	630 A	A	130	XA	Fixed-Type
		21	12 kV	4	25 kA	2	1,250 A	B	140	EA	Draw-Out (E-Type Body)
		31	17.5 kV	5	31.5 kA	4	2,000 A	C	150	ES	Draw-Out (Shutter Unattached Cradle)
		61	24/25.8 kV	6	40 kA	6	2,500 A	D	165	FA	Draw-Out (F-Type Body)
		70	36/38 kV	7	50 kA	7	3,150 A	E	178	FS	Draw-Out (Shutter Attached Cradle)
		71	36 kV			8	4,000 A	F	210	IA	Draw-Out (IG-Type Body)
								G	250	IG	Draw-Out (Bushing and Insulation Shutter Attached Cradle)
								H	254	IE 2)	Draw-Out (IG-Type + Earthing Switch)
								I	275	GA	Draw-Out (GS-Type Body)
								J	300	GS	Draw-Out (Bushing and Metal Shutter Attached Cradle)
								K	350	GE 2)	Draw-Out (GS-Type + Earthing Switch)
										CS	Draw-Out (G-Level VCB for HVF 7.2/12 kV Vessel)
										E3	Draw-Out (24 kV Shutter Unattached, Phase-to-Phase Distance 300 mm Cradle 630/1,250 A)
										F3	Draw-Out (24 kV Shutter Attached, Phase-to-Phase Distance 300 mm Cradle 630/1,250 A)
										SA	Draw-Out (Screw Operation Type Body)
										SF	Draw-Out (Screw Operation Type, FS-Type VCB)
										KD	Draw-Out (630/1,250 A for E-Type 24 kV for Cradle Depth 850 mm)
										MS	Draw-Out (ANSI 38 kV Draw-Out Type VCB and G-Type Cradle)
										WA	Draw-Out (ANSI 4.76 kV Draw-Out Type VCB)
										MA	Draw-Out (HEES Standard Switchgear Models)
										GK	Draw-Out (KEPCO Hydro and Thermal Models)

HVF Type (With Separate Cradle Order)

DVF	11	4	1	C	ES
Model	Rated Voltage	Rated Breaking	Rated Current	Inter-Phase Distance 1)	Installation Method

Model		Rated Voltage		Rated Breaking		Rated Current		Inter-Phase Distance 1)		Installation Method	
DVF	Vacuum Circuit Breakers Cradle	11	7.2 kV	1	12.5 kA	1	630 A	A	130	ES	Draw-Out
		21	12 kV	4	25 kA	2	1,250 A	B	140	FS	Draw-Out
		31	17.5 kV	5	31.5 kA	4	2,000 A	C	150	GS	Draw-Out
		61	24/25.8 kV	6	40 kA	6	2,500 A	D	165	MS	Draw-Out
		70	38 kV	7	50 kA	7	3,150 A	E	178	GK	Draw-Out
		71	36 kV			8	4,000 A	F	210	IG	Draw-Out
								G	250	GE	Draw-Out
								H	254	SF	Draw-Out
								I	275	IG	Draw-Out
								J	300	E3	Draw-Out
								K	350	F3	Draw-Out

※ 1) Body phase-to-phase distance.
Refer to 34 ~ 38 pages for selecting phase-to-phase distance.
2) Earthing Switch attaching type must have attachment EE (Earthing Switch operation marking point) in its order code.

4	4	4	A	P2
Closing Operation (Motor) Voltage	Closing Control Voltage	Trip Control Voltage	Auxiliary Contacts and Line	Attachments

2	DC 48 V
4	DC 110 V
5	DC 125 V
6	DC 220 V
7	AC 110 V
9	AC 220 V
L	DC 250 V
A	DC 24 V (Special)
B	DC 48 V (Special)
D	DC 110 V (Special)
E	DC 125 V (Special)
F	DC 220 V (Special)
G	AC 110 V (Special)
I	AC 220 V (Special)

A	Standard Contacts and Fixed Control Jack
B	7NO + 7NC & Fixed Control Jack
C	4NO + 4NC & Draw-Out Control Jack
D	10NO + 10NC & Draw-Out Control Jack
X	Control Jack Unattached
W	When Applied Auto Jack

P2	Position Switch (GS Type can order P2 and P4)
U□	Under Voltage Release (□ : Order Number of the Control Voltage)
R□	Second Shunt Release (□ : Order Number of the Control Voltage)
L□	Lockout Relay (□ : Order Number of the Control Voltage)
V□	Varistor Module (□ : Number of Varistor)
PO	CAM for Position Switch
KL	Position Padlock Key
EL	Electrical Local Closing
CO	Cut-Out Switch
S1	Spring Charged Signal (S41)
C1	C.T Operated Release 0.5 A
C2	C.T Operated Release 1.0 A
EE	Earthing Switch Operation Marking Contacts
NA	Flame Retardant Cable (for 4NO + 4NC)
NB	Flame Retardant Cable (for 7NO + 7NC, 10NO + 10NC)
TC	Trip Monitoring Circuit
S2	Line System Applied Breaker
WC	Wiping Contact Auxiliary Contact
ZZ	Special Features or Attachment
BB	Button Padlock (Close & Open)
BC	Button Padlock (Close)
BO	Button Padlock (Open)
LC	Electro Locking Device

0	0	0	0	P2
Closing Operation (Motor) Voltage	Closing Control Voltage	Trip Control Voltage	Auxiliary Contacts and Line	Attachments

0	None

0	None

P2	Position Switch (GS Type can order P2 and P4)
KL	Position Padlock Key
ZZ	Special Features or Attachment
EE	Earthing Switch (2 Position) Operation Marking Contacts
LC	Electro Locking Device (See H-21)

Order Code

HVG Type (For Body + Cradle Order)

HVG	10	9	9	A	ES
Model	Rated Voltage	Rated Breaking	Rated Current	Inter-Phase Distance 3)	Installation Method

Model		Rated Voltage		Rated Breaking		Rated Current		Inter-Phase Distance 3)		Installation Method	
HVG	Vacuum Circuit Breakers	10 1)	7.2 kV	9	8 kA	9	400 A	A	130	XA	Fixed-Type
		11 2)	7.2 kV	1	12.5 kA	1	630 A	B	140	EA	Draw-Out (Body)
				3	20 kA	2	1,250 A	D	165	ES	Draw-Out (Shutter Unattached Cradle)
				4	25 kA					FA	Draw-Out (Body)
										FS	Draw-Out (Shutter Attached Cradle)
										GA	Draw-Out (Body)
										GS	Draw-Out (Bushing and Shutter Attached Cradle)

HVG Type (With Separate Cradle Order)

DVG	10	9	9	A	ES
Model	Rated Voltage	Rated Breaking	Rated Current	Inter-Phase Distance 3)	Installation Method

Model		Rated Voltage		Rated Breaking		Rated Current		Inter-Phase Distance 3)		Installation Method	
DVG	Vacuum Circuit Breakers Cradle	10 1)	7.2 kV	9	8 kA	9	400 A	A	130	ES	Draw-Out
		11 2)	7.2 kV	1	12.5 kA	1	630 A	B	140	FS	Draw-Out
				3	20 kA	2	1,250 A			GS	Draw-Out
				4	25 kA						

※ 1) Corresponds to the rated interrupting current 8, 12.5 kA.
2) Corresponds to the rated interrupting current 20, 25 kA.
3) Body phase-to-phase distance. Refer to 34 ~ 38 pages for selecting phase-to-phase distance.

4	4	4	A	P2
Closing Operation (Motor) Voltage	Closing Control Voltage	Trip Control Voltage	Auxiliary Contacts and Line	Attachments

2	DC 48 V
4	DC 110 V
5	DC 125 V
6	DC 220 V
7	AC 110 V
9	AC 220 V

A	4NO + 4NC & Fixed Control Jack
B	7NO + 7NC & Fixed Control Jack
D	10NO + 10NC & Fixed Control Jack
X	Control Jack Unattached

P2	Position Switch
V□	Varistor Module (□ : Number of Varistor)
P0	For Position Switch CAM (when Ordering Body Only)
KL	Position Padlock Key
NA	Flame Retardant Cable (For 4NO + 4NC)
NB	Flame Retardant Cable (For 7NO + 7NC, 10NO + 10NC)
ZA	Upper Insulating Cover (1099 ~ 1011/1131 ~ 1142 Type)
ZZ	Special Features or Attachment

0	0	0	0	P2
Closing Operation (Motor) Voltage	Closing Control Voltage	Trip Control Voltage	Auxiliary Contacts and Line	Attachments

0	None

0	None

P2	Position Switch
KL	Position Padlock Key
ZZ	Special Features or Attachment

Order Code

UVC Type (For Body + Cradle Order)

UVC	6	4	C	D1	F1
Model	Rated Voltage	Rated Current	Operation Method	Connection Method / Fuse	Division / Cradle

Model		Rated Voltage		Rated Current		Operation Method	
UVC	Vacuum Contactor	3	3.6 kV	2	200 A	C	Continuous-Type
		6	7.2 kV	4	400 A	L	Latch-Type

Connection Method		Fuse
X1	Fixed-Type	Fuse Unattached 21 Pin Control Plug (Front Draw-Out)
A1	Fixed-Type	Din Fuse Attached 21 Pin Control Plug (Front Draw-Out)
A2	Fixed-Type	KS Fuse Attached 21 Pin Control Plug (Front Draw-Out)
A3	Fixed-Type	KS Fuse Attached 300 A, 400 A for 7.2 kV Motor 21 Pin Control Plug (Front Draw-Out)
B1	Draw-Out	Fuse Unattached 21 Pin Control Plug (Front Draw-Out)
B2	Draw-Out	Fuse Unattached 52 Pin Control Plug (Top Draw-Out)
D1	Draw-Out	DIN Fuse Attached 21 Pin Control Plug (Front Draw-Out)
D2	Draw-Out	DIN Fuse Attached 52 Pin Control Plug (Top Draw-Out)
D3	Draw-Out	KS Fuse Attached 21 Pin Control Plug (Front Draw-Out)
D4	Draw-Out	KS Fuse Attached 300 A, 400 A for 7.2 kV Motor 21 Pin Control Plug (Front Draw-Out)
D5	Draw-Out	KS Fuse Attached 52 Pin Control Plug (Top Draw-Out)
D6	Draw-Out	KS Fuse Attached 300 A, 400 A for 7.2 kV Motor 52 Pin Control Plug (Top Draw-Out)

Division		Cradle
00	Fixed-Type	-
E0	E-Class (Shutter Unattached)	Not Used (Body Only)
E1		Used
F0	E-Class (Shutter Unattached)	Not Used (Body Only)
F1		Used

6000

Fuse Specifications

0000	Fuse Holder Unattached		
200A	Fuse Holder Only Attached	For LS Company KS/G-Type Fuse	3.6 kV 50 A or below
200B			3.6 kV 75 ~ 200 A
200C			3.6 kV 300 A, 400 A
300B		For LS Company KS/M-Type Fuse	3.6 kV 100 A or below
300C			3.6 kV 150 ~ 200 A
300D			3.6 kV 300 A, 400 A
400A		For LS company KS/G-Type Fuse	7.2 kV 60 A or below
400B			7.2 kV 75 ~ 100 A
400C			7.2 kV 150 ~ 200 A
500B		For LS company KS/M-Type Fuse	7.2 kV 50 A or below
500C			7.2 kV 100 ~ 200 A
500D			7.2 kV 300 A, 400 A
6000		DIN-Type	Length 192 mm, SIBA Company or LS Company
600A			Length 292 mm, SIBA Company 315 A, 355 A
□□□□ 4 Digits Excluding UVCS from Spare Part Fuse Order Code	Fuse Attached	6□□□	SIBA Company Fuse (7.2 kV)
		7□□□	SIBA Company Fuse (12 kV)
		2□□□	LS Company KS/G-Type Fuse
		3□□□	LS Company KS/M-Type Fuse
		4□□□	LS Company KS/G-Type Fuse
		5□□□	LS Company KS/M-Type Fuse
		8□□□	LS Company DIN-Type Fuse
		9□□□	LS Company DIN-Type Fuse

L

Operating Voltage

L	AC/DC 100 ~ 125 V
H	AC/DC 200 ~ 230 V

CM

Attachments

CL	Electrical Position Interlock	
CM	Fuse Melting Indicator	DIN Standard
CD	Fuse Melting Indicator	KS Standard
CP	Position Detecting Switch	
T1	1 Potential Transformer	3.3 kV/110 V
T2	1 Potential Transformer	3.3 kV/220 V
T3	1 Potential Transformer	6.6 kV/110 V
T5	1 Potential Transformer	6.6 kV/220 V
T4	2 Potential Transformer	3.3 kV/110 V
T7	2 Potential Transformer	3.3 kV/220 V
T6	2 Potential Transformer	6.6 kV/110 V
T8	2 Potential Transformer	6.6 kV/220 V

Order Code

VI Order Code

HCV	6B
Model	Rating

Model		Rating	
VI	Vacuum Interrupters	3B	7.2/12/17.5 kV 25 kA 630/1,250/2,000 A
		3D	7.2/12/17.5 kV 31.5/40 kA 1,250/2,000 A
		3E	7.2/12/17.5 kV 31.5/40 kA 2,500/3,150/4,000 A
		3F	7.2/12/17.5 kV 50 kA 1,250/2,000 A
		3G	7.2/12/17.5 kV 50 kA 2,500/3,150/4,000 A
		6A	24/25.8 kV 12.5 kA 630 A
		6B	24/25.8 kV 12.5/25 kA 630/1,250/2,000 A

Operating Environment

Standard Operating Environment

Defining values below have been set in accordance with IEC 62271-100 (IEC 62271-1).

| Ambient Temperature | - 5 ~ + 40 °C
(Average day temperature below 35 °C)
| Operating Altitude | Less than 1,000 m above sea level
| Relative Humidity | Less than 95 % (Daily average less than 95 %)

The environment may affect insulation performance and the durability of the vacuum circuit breaker thus, make sure to check the operation environmental conditions before application.

For operation in a high temperature exceeding 40 °C, follow the derating in accordance with the ambient temperature in the catalog.

Operation in a humid place with frequent heavy rain may deteriorate dielectric strength and electrical performance.

For saving and using in a dusty and humid place, it is recommended to use anti-dust cover and moisture preventer. Excessive shock and vibration can cause damage to the operating mechanism.

For a long-term ON or OFF, it is recommended to regularly open/close load current to maintain the interrupting performance.

When there is much corrosive gas, it should be kept in a closed protective structure to minimize damage due to corrosion.

In high altitude mountains, the dielectric strength is degraded, thus check the insulation performance correction factor and apply higher rated products.

Special Operation Environments

HG-Series vacuum circuit breakers are designed/manufactured to operate at a standard operating environment specified in the IEC standard. In order to operate the breaker in a special environment as follows, contact us.

- In case altitude and ambient temperature does not fall in the standard operating environment
- Places with much sea breeze or salt
- Places with heavy snow
- Places with frequent shock and vibration
- In case relative humidity does not fall in the standard operating environment
- In case humidity is high and rainfall is frequent
- Places with much dust, vapor, corrosive and flammable gases and wet steam
- Other special environment that does not fall in the standard environment category

Operating Environment

Compensation of Insulation Performance where Altitude above Sea Level Exceeds 1,000 m

Since the higher the elevation the more insulation performance degradation, refer to below correction factor to select the product to operate.

※ **Product Selection ≥ Commercial Frequency Withstand Voltage and Brain Shock Withstand Voltage × Correction Factor**

For example, to select a product to operate in a place where rated voltage is 7.2 kV and sea level altitude is 2,000 m,

- Correction factor for 2,000 m is 1.13
- Withstand voltage required for rated voltage :
  Commercial frequency withstand voltage = 20 kV/min, Brain shock withstand voltage = 60 kV
- Standard of required withstand voltage :
  Commercial frequency withstand voltage = 20 × 1.13 = 22.6 kV/min,
  Brain shock withstand voltage = 60 × 1.13 = 67.8 kV.
  Thus make sure to select product with rated voltage of 12 kV that meets the required insulation performance.

1,000 m
When Altitude Above Sea Level

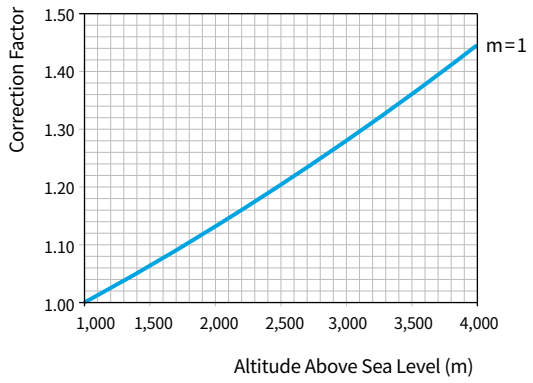

Item	Description				
Applied Altitude	1,000 m	1,500 m	2,000 m	2,500 m	3,000 m
Correction Factor	1.0	1.06	1.13	1.2	1.28

Standard of Withstand Voltage per Rated Voltage Specified in IEC 62271-1

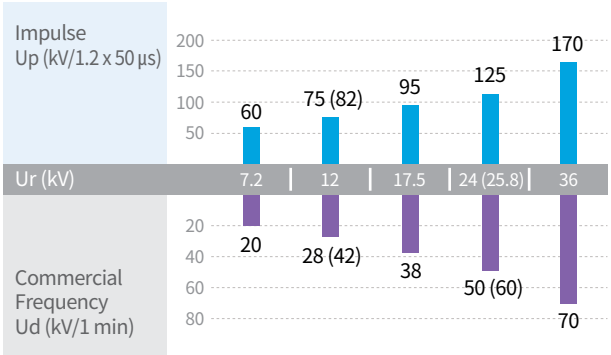

Correcting Rated Current According to Ambient Temperature

If ambient temperature exceeds the temperature of the standard operating environment, use below formula to correct operating current value and apply to operation.

40 °C
When Ambient Temperature

$$I_s = I_r \sqrt{\left\{ \frac{\theta_{max} - \theta_\alpha}{\theta_\gamma} \right\}}$$

I_s : Corrected rated continuous conducting current (A)
I_r : Rated continuous conducting current in a normal state (- 5 ~ + 40 °C) (A)
θ_{max} : All temperature in the highest permissible temperature area (°C)
θ_α : Actual ambient temperature (if less than - 5 °C or higher than + 40 °C)
θ_γ : Highest permissible temp in the highest temperature area during rated current (°C)

E.g.) If ambient temperature is 50 °C, corrected continued conducting current of breaker of 2,000 A rated current : $2{,}000 \times \sqrt{\frac{105 - 50}{65}} = 1{,}840$ A

Table for Rated Current based on Ambient Temperature

Rated Current (A)	Ambient Temp (°C)				
	-5 ~ 40	45	50	55	60
4,000	4,000	3,843	3,679	3,508	3,328
3,150	3,150	3,026	2,898	2,763	2,621
2,500	2,500	2,402	2,300	2,193	2,080
2,000	2,000	1,922	1,840	1,754	1,664
1,250	1,250	1,201	1,150	1,096	1,040
630	630	605	580	553	524

Maintenance Inspection List

Breaker Anomaly and Action Plan

Symptom	Cause	Action Plan
Closing Spring is not Charged	Electrical spring is not charged ・Control cable is missing or short ・Motor/limit switch is faulty	・Check if control cable is missing ・Replace motor/limit switch
	Manual spring is not charged	・Check operating mechanism unit status
Breaker is not Closing	Electrical closing or manual closing is not available ・Control cable is missing or short ・Motor charging failure ・Interlock operation failure ・Voltage application status failure ・During UVR or secondary trip coil operation	・Check if control cable is missing ・Check motor connection status ・Check interlock operation status ・Check voltage status (Minimum Voltage : Rated×85 %) ・Check UVR or secondary trip coil control voltage status
	Tripped after half-closing status or right after closing	Check operating status of operating
Breaker is not Tripped	Electrical trip and manual trip is not available ・Control cable is missing or short ・Bad auxiliary switch ・Voltage application status failure	・Check if control cable is missing ・Replace auxiliary switch ・Check voltage status (Minimum Voltage : Rated×70 %)
Breaker does not Push/ Draw	Pushing/drawing handle insertion failure	・Check pushing/drawing handle insertion status ・Check assembly status of shutter mechanism and shutter mechanism unit ・Check interlock operation status
	Interference occurs to shutter and interruption period	
	Interlock malfunction	
	Pushing/drawing device interlock failure	
Breaker Position Switch is not Working	Control cable is missing or short	・Check if control cable is missing ・Replace position switch
	Position switch failure	

Periodic Inspection List

Inspection Item	Items to Check	Inspection Intervals
Basics	1. Wipe off dirt or moisture on the insulator/insulator surface with a dry cloth	Twice a year
	2. Check external damage	
	3. Check the status of bolt and nut tightness in and out of operation mechanism unit	
	4. Check any damage to snap-retainer and C-ring	
	5. Check connection status between the terminal and the conductor (Modified by corrosion and temperature)	
Operation Test	1. Check electrical/mechanical operation of operation mechanism unit (At least 10 continued operation)	Every 2,000 operation, or interrupting each short-circuit 10 times
	2. Check if ON/OFF indicator or behavior count indicator is working properly	
Insulation Resistance	Measure insulation resistance between phases and between counter grounds at 1,000 V Megger (For measurement 500 MΩ or below, analysis is required)	Twice a year
Withstand Voltage Test	Conduct commercial frequency withstand voltage in compliance with regulated application value	Twice a year
Apply Grease	1. Apply grease to each rotating and rubbing areas (Grease Specification : CHEMAX HHI 5000 # 1)	Every two years or every 2,000 operation
	2. Wipe the terminal conductor with a dry cloth and apply very small amount of conductive grease (Grease Specifications : FLOIL G-5002)	
Vacuum Interrupters (VI)	1. Check status of contacts wear with naked eyes (Replacement is required when white mark of VI stem is confirmed to be 1/2 or less with breaker closing)	Every two years or every 2,000 operation
	2. Check vacuum degree using vacuum checker with breaker tripped	

Current Status of Acquired Standards

Approvals & Certificates

Hi-Series VCB (Vacuum Circuit Breaker)

Type of Certification	Approvals	Certificate		
Type of Standard	KS	KAS Certified V Checkmark	IEC	GB
Mark				
Testing Institute	KS	Korea Electrical Safety Corporation KAS-P-008	KERI	GB 1984
Certification Country	Korea	Korea	Korea	China
HAF1072-3				●
HAF1074-3				●
HAF1077-3				●
HVG1011	●	●	●	
HVG1031			●	
HVG1041			●	
HVG1099	●	●	●	
HVG1131		●	●	
HVG1132		●	●	
HVG1141		●	●	
HVG1142		●	●	
HVF1141		●	●	
HVF1142		●	●	
HVF1151		●	●	
HVF1152		●	●	
HVF1154		●	●	
HVF1162		●	●	
HVF1164		●	●	
HVF1166		●	●	
HVF1167		●	●	
HVF1168		●	●	
HVF1172		●	●	
HVF1174		●	●	
HVF1176		●	●	
HVF1177		●	●	
HVF1178		●	●	
HVF1378				●
HVF1442			●	
HVF1444			●	
HVF1462			●	
HVF1464			●	
HVF1542			●	
HVF1544			●	
HVF2141		●	●	
HVF2142		●	●	
HVF2151		●	●	
HVF2152		●	●	
HVF2154		●	●	
HVF2161			●	
HVF2162		●	●	
HVF2164		●	●	
HVF2166		●	●	
HVF2167		●	●	

Type of Certification	Approvals	Certificate		
Type of Standard	KS	KAS Certified V Checkmark	IEC	GB
Mark				
Testing Institute	KS	Korea Electrical Safety Corporation KAS-P-008	KERI	GB 1984
Certification Country	Korea	Korea	Korea	China
HVF2168		●	●	
HVF2172		●	●	
HVF2174		●	●	
HVF2176		●	●	
HVF2177		●	●	
HVF2178		●	●	
HVF3141		●	●	
HVF3142		●	●	
HVF3151		●	●	
HVF3152		●	●	
HVF3154		●	●	
HVF3161			●	
HVF3162		●	●	
HVF3164		●	●	
HVF3166		●	●	
HVF3167		●	●	
HVF3362				●
HVF3364			●	●
HVF3442			●	
HVF3444			●	
HVF3462			●	
HVF3464			●	
HVF3467			●	
HVF3542			●	
HVF3544			●	
HVF6111		●	●	
HVF6112		●	●	
HVF6114			●	
HVF6141		●	●	
HVF6142		●	●	
HVF6144		●	●	
HVF6146		●	●	
HVF6147		●	●	
HVF6162			●	
HVF6164			●	
HVF6166			●	
HVF6167			●	
HVF7052		●	●	●
HVF7056		●	●	
HVF7057		●	●	
HVF7062				●
HVF7142		●	●	
HVF7144		●	●	

Current Status of Acquired Standards

Approvals & Certificates

Hi-Series VCS (High-Pressure Vacuum Contactor)

Type of Certification	Approvals	Certificate	
Type of Standard	UL	IEC	ANSI
Mark			
Testing Institute	UL	KERI	KERI
Certification Country	USA	Korea	Korea
HCA34CD	●		
HCA62CD		●	
HCA62LD		●	
HCA64CD	●	●	●
HCA64LD		●	●

U-Series VCS (High-Pressure Vacuum Contactor)

Type of Certification	Approvals	Certificate	
Type of Standard	UL	KAS Certified V Checkmark	IEC
Mark			
Testing Institute	UL	Korea Electrical Safety Corporation KAS-P-008	KERI
Certification Country	USA	Korea	Korea
UVC32C	●	●	
UVC32L	●	●	
UVC34C	●		
UVC34L	●		
UVC62C	●	●	●
UVC62L	●	●	●
UVC64C	●		●
UVC64L	●		●

Approvals & Marine Certificates

Hi-Series VCB (Vacuum Circuit Breaker)

Type of Certification	Vessel		
Type of Standard	Korean Register	Bureau Veritas	Germanischer Lloyd
Mark	KR KOREAN REGISTER	BUREAU VERITAS	GL OPERATING 24/7
Testing Institute	KR	BV	GL
Certification Country	Korea	France	Germany
HVF1164		●	
HVF1166		●	
HVF1167		●	
HVF1168		●	
HVF1172		●	
HVF1174		●	
HVF1176		●	
HVF1177		●	
HVF1178		●	
HVF2041	●		●
HVF2042	●	●	●
HVF2164		●	
HVF2166		●	
HVF2167		●	
HVF2168		●	
HVF2172		●	
HVF2174		●	
HVF2176		●	
HVF2177		●	
HVF2178		●	
HGV1142C	●	●	●
HGV2142C	●	●	●

Hi-Series VCS (High-Pressure Vacuum Contactor)

Type of Certification	Vessel		
Type of Standard	Korean Register	Bureau Veritas	Germanischer Lloyd
Mark	KR KOREAN REGISTER	BUREAU VERITAS	GL OPERATING 24/7
Testing Institute	KR	BV	GL
Certification Country	Korea	France	Germany
HCA32C	●	●	
HCA34C	●	●	
HCA62C	●	●	
HCA64CD	●	●	●
HCA64LD		●	●
UVC64			●